Halogen lamps

Double-ended flood PLUSline PRO

Small R7s

Compact R7s

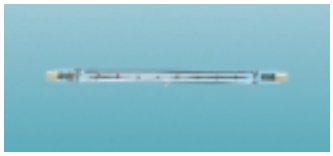

Large R7s

Large FA4

Mains-voltage, linear halogen lamps with a coiled-coil filament and a clear tubular quartz bulb. These double-ended, high-efficacy lamps are used for general lighting, task lighting and floodlighting purposes.
The filament inside has reinforced filament supports for maximum safety and shock resistance.
Dimples in the bulb keep the filament in position, which enables a universal burning position for types up to 500 W; above this, ±4 degrees.
Two arc-preventing fuses for types up to 500 W provide greater security.
PLUSline PRO lamps combine the benefit of 20 % more light than ordinary double-ended halogen lamps with all the well-known benefits of halogen lighting: high luminous efficacy; crisp, white light; excellent colour rendering; constant light output during life; long life; immediate start and restart; and dimmability.
Small linear types are being produced now with UV block quartz.

Note

LAMPS SHOULD BE USED IN LIGHTING EQUIPMENT WITH A COVER GLASS.

Applications

- Indoors: homes, offices, shops and museums
- Outdoors: billboards, car parks, security lighting and construction sites.

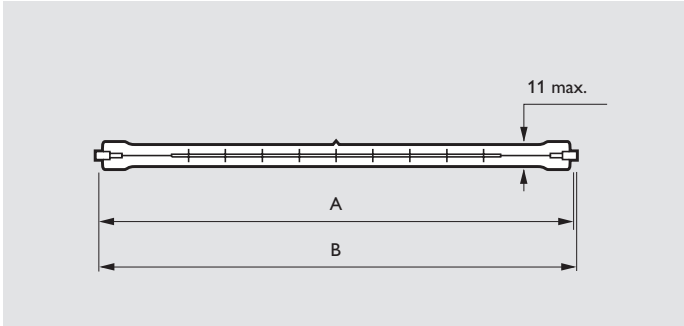

Dimensions in mm

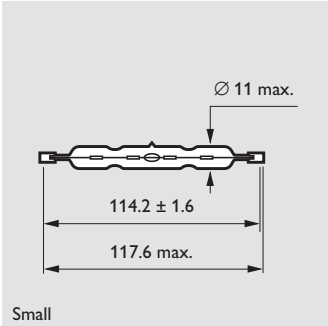

Burning positions

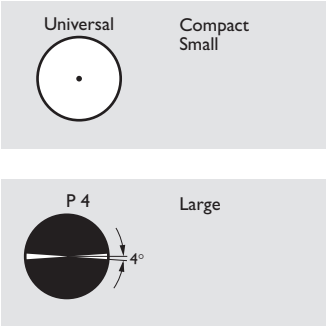

Type	A	B max.
Cap/base R7s		
Compact	74.9±.6	78.3
Large 750, 1000T3 Q/CL/P	185.7±.6	189.1
Large 1000T3(9245 157 455)	250.7±.6	254.1
Large 1500T3 Q/CL/P	250.7±.6	254.1

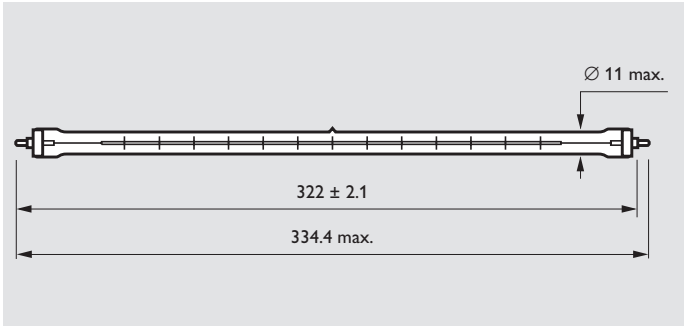

2000 T3 Q/CL/P FA4

PHILIPS

Type	V	W	Cap/ base	Correlated colour temperature K	Lumen output lm	Lamp current A	Efficacy source lm/W	Lamp life 50% h	Maximum permissible base/pinch temperature degr.C	Maximum permissible bulb temperature degr.C	Ordering number	EOC
COMPACT												
60 T3 Q/CL/CP	230V	60W	R7s	2900	810	0.26	13.5	1500	350	900	9245 055 44200	494726
100 T3 Q/CL/CP	120V	100W	R7s	2900	1600	0.83	16.0	2000	350	900	9245 022 34500	495082
100 T3 Q/CL/CP	230V	100W	R7s	2900	1600	0.43	16.0	2000	350	900	9239 200 43200	058331
100 T3 Q/CL/CP	240V	100W	R7s	2900	1600	0.42	16.0	2000	350	900	9239 200 45700	058270
150 T3 Q/CL/CP	120V	150W	R7s	2900	2400	1.25	16.0	2000	350	900	9245 023 34500	495099
150 T3 Q/CL/CP	230V	150W	R7s	2900	2400	0.65	16.0	2000	350	900	9239 199 43200	058348
150 T3 Q/CL/CP	240V	150W	R7s	2900	2400	0.63	15.0	2000	350	900	9239 199 45700	058287
200 T3 Q/CL/CP	230V	200W	R7s	2900	3400	0.87	17.0	2000	350	900	9245 005 43200	494290
SMALL												
150 T3 Q/CL/P	230V	150W	R7s	2900	2250	0.65	15.0	2000	350	900	9245 056 44200	494733
200 T3 Q/CL/P	120V	200W	R7s	2900	3520	1.67	17.6	2000	350	900	9239 414 34500	494603
200 T3 Q/CL/P	230V	200W	R7s	2900	3520	0.87	17.6	2000	350	900	9239 317 43200	494375
200 T3 Q/CL/P	240V	200W	R7s	2900	3520	0.83	17.6	2000	350	900	9239 317 45700	058294
300 T3 Q/CL/P	120V	300W	R7s	2900	5200	2.50	17.0	3000	350	900	9238 804 34500	494665
300 T3 Q/CL/P	230V	300W	R7s	2900	5600	1.30	18.7	2000	350	900	9239 318 43200	494382
300 T3 Q/CL/P	240V	300W	R7s	2900	5600	1.25	18.7	2000	350	900	9239 318 45700	058317
500 T3 Q/CL/P	125/130V	500W	R7s	2900	9500	3.84	19.0	3000	350	900	9238 803 35600	-
500 T3 Q/CL/P	120V	500W	R7s	2900	9500	4.16	19.0	3000	350	900	9238 803 34500	494634
500 T3 Q/CL/P	230V	500W	R7s	2900	9900	2.17	19.8	2000	350	900	9239 319 43200	494399
500 T3 Q/CL/P	240V	500W	R7s	2900	9900	2.08	19.8	2000	350	900	9239 319 45700	058324
LARGE												
750 T3 Q/CL/P	230V	750W	R7s	2900	16900	3.26	22.5	2000	350	900	9239 320 43200	494337
750 T3 Q/CL/P	240V	750W	R7s	2900	16900	3.13	22.5	2000	350	900	9239 320 45700	055958
1000 T3 Q/CL/P	120V	1000W	R7s	2900	24200	8.33	24.2	2000	350	900	9239 321 34500	494856
1000 T3 Q/CL/P	230V	1000W	R7s	2900	24200	4.35	24.2	2000	350	900	9239 321 43200	494344
1000 T3 Q/CL/P	240V	1000W	R7s	2900	21000	4.16	21.0	3000	350	900	9245 157 45500	-
1000 T3 Q/CL/P	240V	1000W	R7s	2900	24200	4.17	24.2	2000	350	900	9239 321 45700	055972
1500 T3 Q/CL/P	208V	1500W	R7s	2900	33000	7.21	22.0	3000	350	900	9238 322 41400	-
1500 T3 Q/CL/	220V	1500W	R7s	2900	33000	6.81	22.0	3000	350	900	9238 322 42900	-
1500 T3 Q/CL/P	230V	1500W	R7s	2900	36300	6.52	24.2	2000	350	900	9239 322 43200	494351
1500 T3 Q/CL/P	240V	1500W	R7s	2900	36300	6.25	24.2	2000	350	900	9239 322 45700	055996
1500 T3 Q/CL/P	277V	1500W	R7s	2900	33000	5.41	22.0	3000	350	900	9239 322 46900	-
2000 T3 Q/CL/P	230V	2000W	FA4	2900	48400	8.70	24.2	2000	350	900	9239 323 43200	494368
2000 T3 Q/CL/P	240V	2000W	FA4	2900	48400	8.33	24.2	2000	350	900	9239 323 45700	-