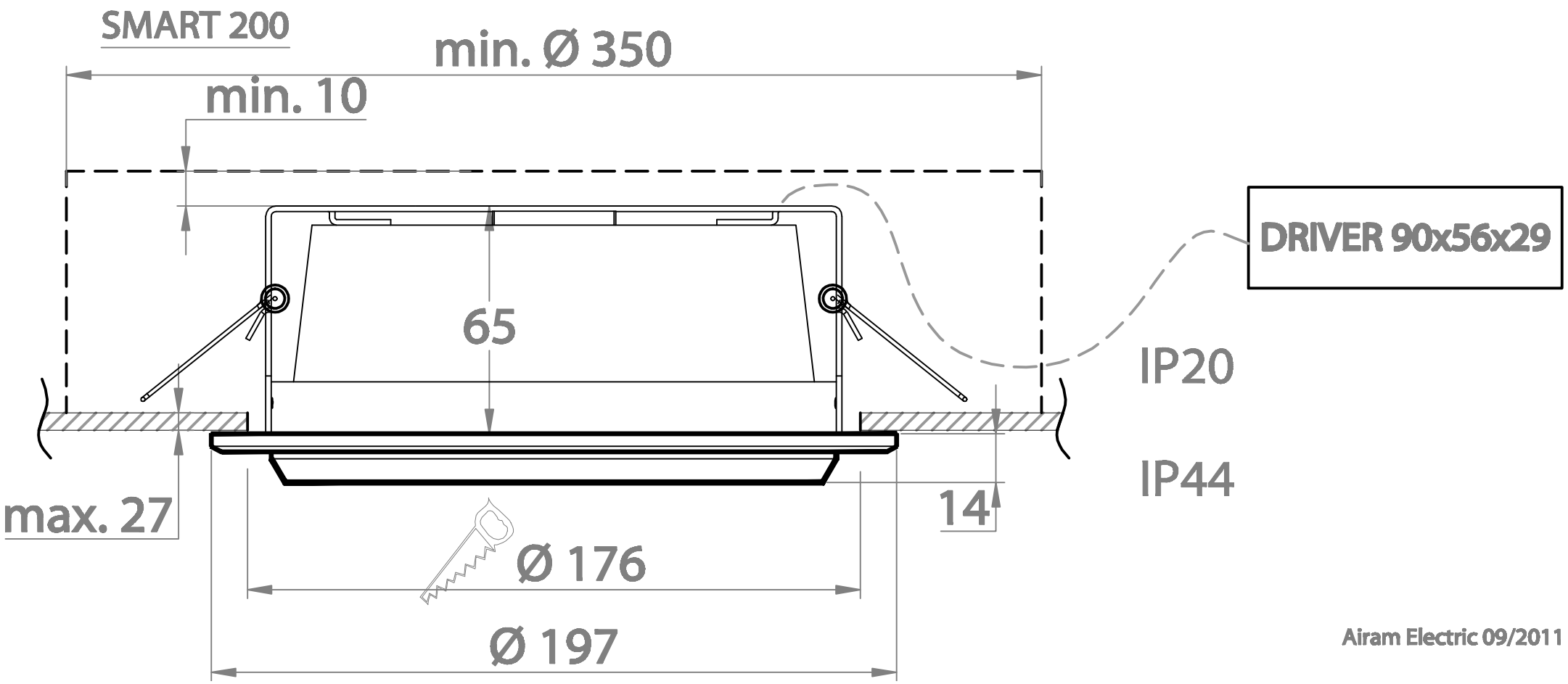

Airam Electric 09/2011