Data sheet



Temperature sensor

MBT 5310

For monitoring of bearing temperatures in Wind turbines, engines and gearboxes applications

Description

The MBT 5310 temperature sensor series is specially designed for measuring the temperature in bearings where there is a risk of overheating.

To get a very short reaction time the measuring element is placed in a way to secure a reaction time of down to $t_{0.5}$ = 6 sec. in water.

The sensor is fitted with an adjustable spring loaded protection tube which ensures metallic contact between bearing and sensor at all times.

Features & benefits

- For monitoring of bearing temperatures where there is risk of overheating, in applications such as:
  - Wind Turbines
  - Engines
  - Gearboxes
- Based on Pt 100 / Pt 1000 technology for use up to 200 °C
- Spring loaded to ensure good contact with the bearing

Ordering

Product code numbers

Ordering standard Plug and B-head

Type MBT 5310

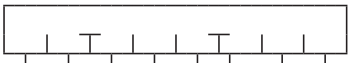

Resistan ce value

1 × Pt 100	0
2 × Pt 100 [1])	1
1 × Pt 1000	2
2 × Pt 1000 [1])	3
Other	9

Protection Tube, W.nr. 1.4571 (AISI 316 Ti)

Acid-proof steel, ø8 × 1mm	0
Other	9

Insertion length (working range)

Brass	Stainless	
70 – 85 mm	73 – 85 mm	85
85 – 100 mm	88 – 100 mm	100
145 – 160 mm	148 – 160 mm	160
210 – 225 mm	213 – 225 mm	225
225 – 240 mm	228 – 240 mm	240
555 – 570 mm	558 – 570 mm	570
Other		xxx

Tolerance

0	EN 60751 Class B

Process connection

0	G ½ A Stainless steel
1	G ¾ A Stainless steel
2	G ½ A Brass
3	G ¾ A Brass
7	½ –14 NPT Stainlees steel
9	Other

Electrical Connections

0	EN 175301-803-A, plug Pg 11 (IP65) 2 wire / 3 terminals
1	EN 175301-803-A, plug Pg 9 (IP65) 2 wire / 3 terminals
3	B-mini head 2 wire / 3 terminals
4	B-mini head 4 wire / 4 terminals
5	B-head standard, 4 wire / 4 terminals
6	B-mini head 2 wire / 2 terminals
7	EN 175301-803-A, plug Pg 9 (IP65) 4 terminals no grounding pin
8	EN 175301-803-A, plug Pg 11 (IP65) 4 terminals no grounding pin
A	M12 plug 2 wire 4 pins
B	M12 plug 4 wire 4 pins

Preferred versions

[1]) Not all electrical connections are possible

Note: Non-standard build-up combinations may be selected. However, minimum order quantities may apply. Please contact your local Danfoss office for further information or request on other versions.

Note: For a detailed overview of our existing code numbers, please visit the Danfoss Product Store at store.danfoss.com. You can use the filtering options to find the right sensor for your specific needs.

Ordering standard cable version

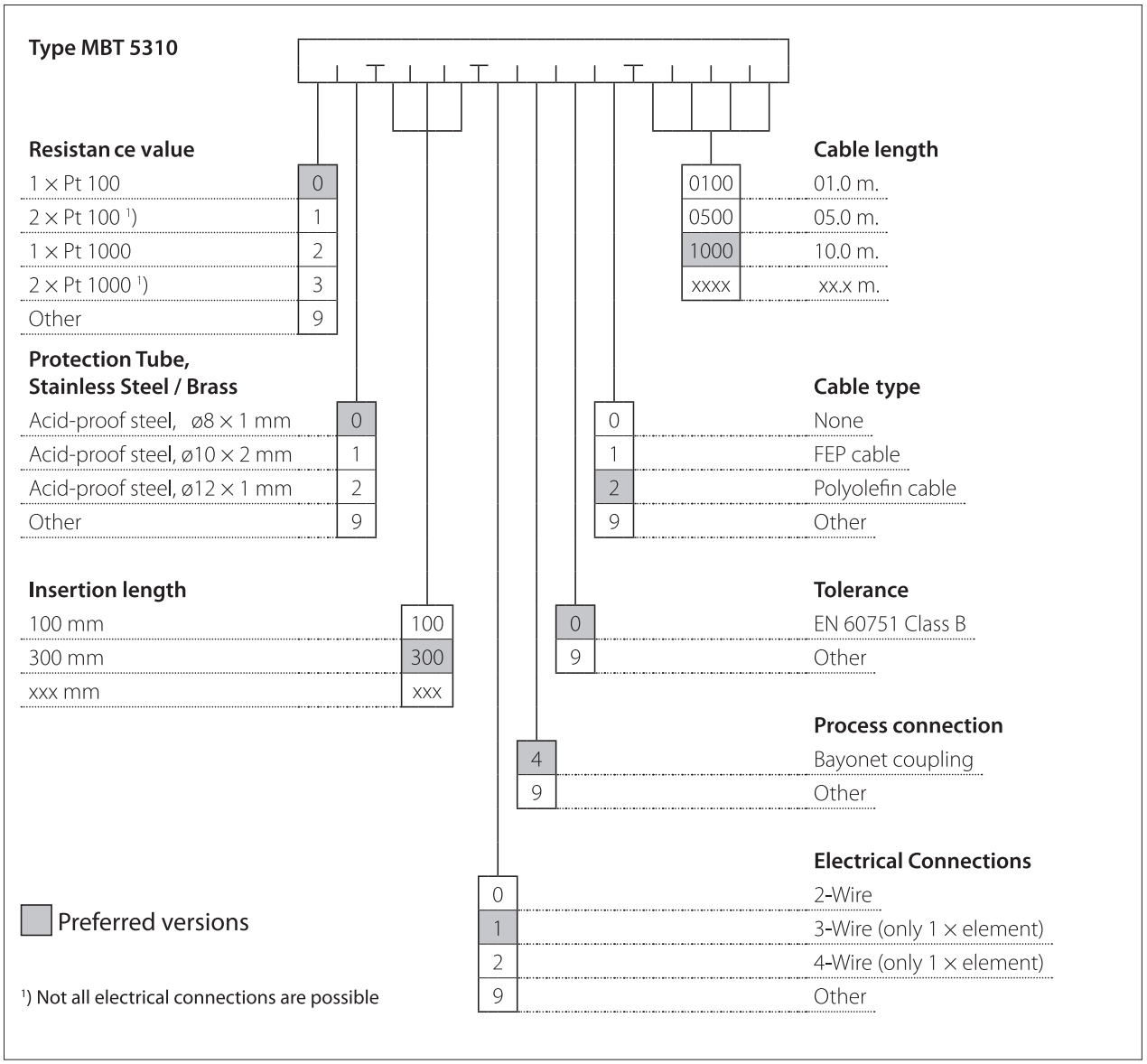

Note: Non-standard build-up combinations may be selected. However, minimum order quantities may apply. Please contact your local Danfoss office for further information or request on other versions.

Note: For a detailed overview of our existing code numbers, please visit the Danfoss Product Store at store.danfoss.com. You can use the filtering options to find the right sensor for your specific needs.

Functions

Spring function

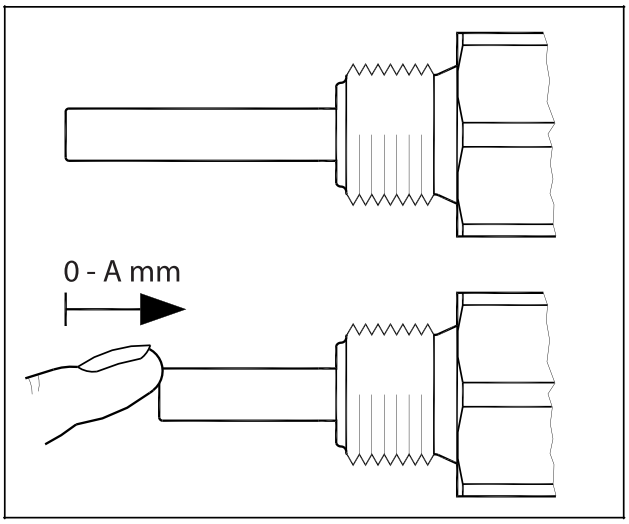

Brass process connection	A = 15 mm
Stainless steel process connection	A = 12 mm

Product details

General data

Technical data

Measuring range	-50 – 200 °C
Sensing element	Pt 100, Pt 1000
Protection tube	ø8 × 1 mm

Response time

Protection tube	Indicative response times			
	Water 0.2 m/s		Air 1 m/s	
	$t_{0.5}$	$t_{0.9}$	$t_{0.5}$	$t_{0.9}$
ø8 × 1 mm	6 s	20 s	35 s	140 s

Materials

Protection tube in contact with the media	AISI 316
O-ring	FPM
Nut	Nickel plated brass
Process connection	AISI 316 / Brass
Gasket	Silicone
Plug EN 175301-803-A	PA (max. 125 °C)
B-head	Die cast aluminium

Mechanical and environmental specifications

Sensor tolerance		EN 60751 Class B: ± (0.3 °C + 0.005 × t) t = temperature of medium, numerical value
Vibration stability	Shock	100 g/6 ms
	Vibrations	4 g sine function 2 – 100 Hz, acc. to IEC 60068-2-6
Enclosure		IP65 according to IEC 60529
B-head		Pg 11
Plug EN 175301-803-A		Pg 9, Pg 11

Technical data - Cable Version

Measuring range	-50 – 200 °C
Sensing element	Pt 100, Pt 1000
Protection tube	ø8 × 1 mm

Response time - Cable Version

Protection tube	Indicative response times			
	Water 0.2 m/s		Air 1 m/s	
	$t_{0.5}$	$t_{0.9}$	$t_{0.5}$	$t_{0.9}$
ø8 × 1 mm	6 s	20 s	35 s	140 s

Materials - Cable version

Protection tube in contact with the media	AISI 316
Spring material	Stainless steel
Cable	FEP or Polyolefin, depending on selection
Process connection, bayonet	AISI 316

Mechanical and environmental specifications - Cable version

Sensor tolerance		EN 60751 Class B: ± (0.3 °C + 0.005 × t) t = temperature of medium, numerical value
Vibration stability	Shock	100 g/6 ms
	Vibrations	4 g sine function 2 – 100 Hz, acc. to IEC 60068-2-6
	Enclosure	IP67 according to IEC 60529

Dimensions

Dimensions [mm]

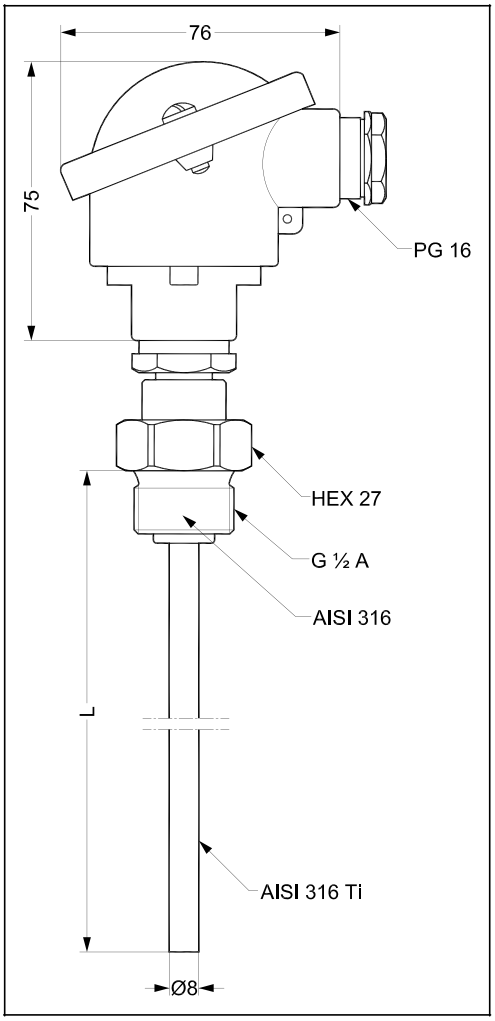

Electrical connection

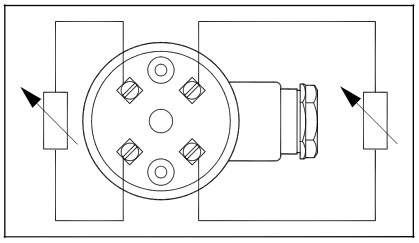

Dimensions

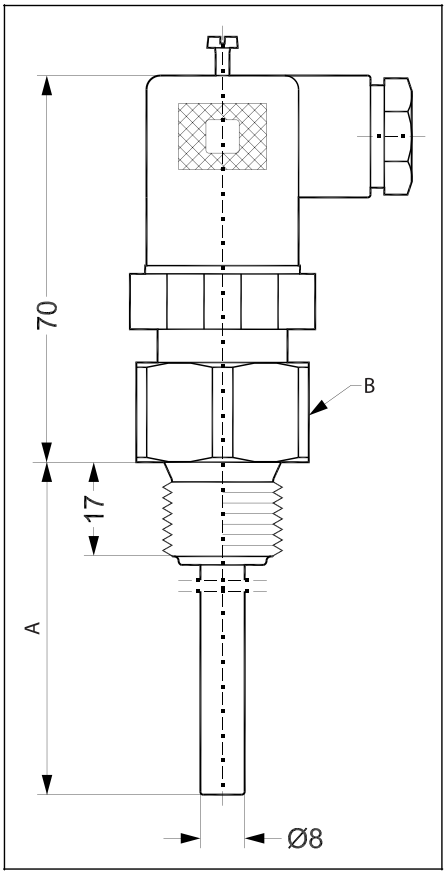

A	Insertion length, variable
B	Stainless or Brass

Electrical connection

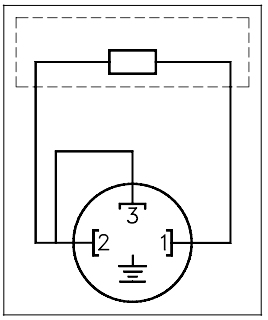

2	wire
3	terminals

Ground not connected

Cable Dimensions [mm]

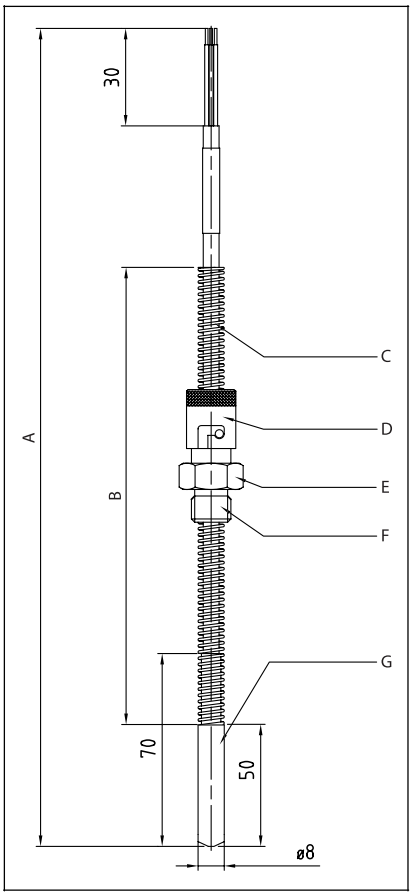

A	Total length
B	Insertion length
C	Spring: Stainless steel
D	Bayonet cap: Stainless steel 316
E	Hex 17
F	2 Pin adapter G1/4A: Stainless steel 316
G	Bayonet tip: Stainless steel 316

Certificates, declarations and approvals

The list contains all certificates, declarations, and approvals for this product type. Individual code number may have some or all of these approvals, and certain local approvals may not appear on the list.

When you click on the link you will be directed to the latest version of the 'Declaration of Conformity'. Products developed and sold before this date of issue conform to the directives/standards in force at the time of their sale.

Approval type	Title	Issuer	Approval topic
Manufacturer's Declaration	Danfoss MD 084R1022.01	Danfoss	China RoHS
Explosive Safety Certificate	UL 12CA69359	UL Demko - UL International DEMKO A - S	ATEX
Marine Certificate	BV 06512-F1 BV	BV - Bureau Veritas	Marine
Marine Certificate	DNV GL TAA00001BE Rev. 1	DNV	Marine
EU-UK Declaration	Danfoss EU-UK 084R1019.04	Danfoss	EMC, EU RoHS, UK RoHS
Manufacturer's Declaration	Simple Apparatus	Danfoss	Simples apparatus
Marine Certificate	KR DLN 34014-AE002	KR - Korean Register of Shipping	Marine
Marine Certificate	ABS 25-0336453-PDA	ABS - American Bureau of Shipping	Marine
Export Control Declaration	Pressure & Temperature Sensors	Danfoss	
EU Declaration	PPWR_Packaging EU PL04	Danfoss	Packaging

Contact details

Online support

Danfoss offers a wide range of support along with our products, including digital information, software, mobile apps and expert guidance. See the possibilities below.

The Danfoss Design center

Discover the Design Center, our advanced digital platform that streamlines product selection. With integrated tools and enhanced type pages, it's simpler than ever to access product information and documentation, and to select the right products. Check the availability of Danfoss products at partner locations and enjoy seamless transitions from selection to purchase with our basket-to-basket functionality. Whether you're buying from our distributors or directly from the Product Store, the Design Center simplifies your experience. Learn more at: designcenter.danfoss.com.

The Danfoss product store

The Danfoss Product Store is a one-stop shop available 24/7 for our customers, no matter where you are in the world or what area of industry you work in. Browse our catalog, check product details and documentation, view your prices and product availability, and quickly finalize your purchase. Start browsing at: store.danfoss.com.

Danfoss Partner Portal/Product Data tool

Designed to support you with easy access to product data extracts, essential resources, tools, and information. The Partner Portal provides a centralized hub for product documentation, training materials, marketing assets, and technical support, ensuring you have everything you need to succeed and grow your business with Danfoss. The Partner Portal is available 24/7 at: partner.danfoss.com and is ready to support your business.

Find technical documentation

Find technical documentation you need to get your project up running. Get direct access to our official collection of data sheets, certificates and declarations, manuals and guides, 3D models and drawings, case stories, brochures, and much more. Start searching now at: documentation.danfoss.com.

Danfoss Learning

Danfoss Learning is a free online learning platform. It features courses and materials specifically designed to help engineers, installers, service technicians, and wholesalers better understand the products, applications industry topics, and trends that will help you do your job better. Find your local Danfoss website here: learning.danfoss.com.

Get local information and support

Local Danfoss websites are the main sources for help and information about our company and products. Find product availability, get the latest reginal news, or connect with a nearby expert - all in your own language. Find your local Danfoss website here: danfoss.com.

Danfoss A/S

Climate Solutions . danfoss.com . +45 7488 2222

Any information, including, but not limited to information on selection of product, its application or use, product design, weight, dimensions, capacity or any other technical data in product manuals, catalogues description, advertisements, etc. and whether made available in writing, orally, electronically, online or via download, shall be considered informative, and is only binding if and to the extent, explicit reference is made in a quotation or order confirmation. Danfoss cannot accept any responsibility for possible errors in catalogues, brochures, videos and other material. Danfoss reserves the right to alter its products without notice. This also applies to products ordered but not delivered provided that such alterations can be made without changes to form, fit or function of the products. All trademarks in this material are property of Danfoss A/S or Danfoss group companies. Danfoss and the Danfoss logo are trademarks of Danfoss A/S. All rights reserved.