Data sheet



Elec. expansion valve coil

ETS 6

Description

The range of electric expansion valves are based on many years of experience. ETS 6 secure reliability and provide a precise solution for expansion and flow control in a wide range of refrigeration and air conditioning systems. Compact and lightweight. The current range is available with a wide capacity range and can be used with all common fluorinated refrigerants. Bi-flow operation is also possible for heat pump systems. The valve operation is by means of a uni-polar motor, which can be controlled by a number of controllers from Danfoss or third party vendors. With an EKE 1V and EIM 336 (current drivers) and an AKS sensor, an accuracy better than ± 0.5 K can be obtained.

Features & benefits

- Optimized energy efficiency of the system
- Precision flow control with high resolution
- Compact and lightweight
- Energy saving design
- Proven know-how and high reliability
- Wide range for all common refrigerants
- Bi-flow for heat pump applications

Ordering

Product code numbers



Table: Nominal capacity [kW] (SI units)

Type	Orifice	Nominal capacity [kW]					Connection (solder)	Valve tube config.	MWP	MOPD	Max. reverse pressure[1]	K_V [m^3/h]	Code no.
	[mm]	R22	R134a	R404A	R407C	R410A	A / B [mm]		[bar]	[bar]	[bar]		
Single pack													
ETS 6 – 08	0.8	1.5	1.2	1.1	1.6	1.8	6.35	90°	47	35	20	0.011	**034G5095**
ETS 6 – 10	1	2.6	2	1.8	2.7	3.1	7.94	90°	47	35	35	0.030	**034G5005**
ETS 6 – 14	1.4	5.8	4.5	4.1	5.9	6.8	7.94	90°	47	35	20	0.052	**034G5015**
ETS 6 – 18[2]	1.8	10.3	8.1	7.3	10.6	12.1	6.35	90°	47	35	28	0.082	**034G5026**
ETS 6 – 25	2.5	19.6	15.3	13.8	20.1	23	7.94	90°	47	35	22	0.164	**034G5035**
ETS 6 – 32	3.2	28.8	22.5	20.3	29.6	33.9	7.94	90°	47	28	12*	0.242	**034G5055**
ETS 6 – 40	4	39.1	30.6	27.6	40.2	46	7.94	90°	47	21	7	0.329	**034G5065**
I-pack (100 units per box)													
ETS 6 – 08	0.8	1.5	1.2	1.1	1.6	1.8	6.35	90°	47	35	20	0.011	**034G5090**
ETS 6 – 10	1	2.6	2	1.8	2.7	3.1	7.94	90°	47	35	35	0.030	**034G5000**
ETS 6 – 14	1.4	5.8	4.5	4.1	5.9	6.8	7.94	90°	47	35	20	0.052	**034G5010**
ETS 6 – 18[2]	1.8	10.3	8.1	7.3	10.6	12.1	6.35	90°	47	35	28	0.082	**034G5024**
ETS 6 – 25	2.5	19.6	15.3	13.8	20.1	23	7.94	90°	47	35	22	0.164	**034G5030**
ETS 6 – 32	3.2	28.8	22.5	20.3	29.6	33.9	7.94	90°	47	28	12*	0.242	**034G5050**
ETS 6 – 40	4	39.1	30.6	27.6	40.2	46	7.94	90°	47	21	7	0.329	**034G5060**

Nominal capacity based on:

t_c = 38 °C, t_e = 5 °C, SC = 0 °C, SH = 0 °C

* Please contact Danfoss if higher maximum reverse pressure valve is required.

[1] Max. Reverse Pressure = Pressure at which the valve can still close tightly in reverse direction (from A to B see fig. 1).

[2] For other connection size, please contact Danfoss - ETS 6 – 18.



Table: Nominal capacity [TR] (US Units)

Type	Orifice	Nominal capacity [TR]					Connection (solder)	Valve tube config.	MWP	MOPD	Max. reverse pressure[1]	C_V [gpm]	Code no.
	[in.]	R22	R134a	R404A	R407C	R410A	A / B [in.]		[psi]	[psi]	[psi]		
Single pack													
ETS 6 – 08	0 1/32	0.426	0.341	0.312	0.454	0.511	1/4	90°	681	507	290	0.013	**034G5095**
ETS 6 – 10	0 3/64	0.739	0.568	0.512	0.767	0.881	5/16	90°	681	507	507	0.035	**034G5005**
ETS 6 – 14	0 1/16	1.649	1.279	1.165	1.677	1.933	5/16	90°	681	507	290	0.060	**034G5015**
ETS 6 – 18[2]	0 5/64	2.928	2.303	2.075	3.014	3.440	1/4	90°	681	507	406	0.099	**034G5026**
ETS 6 – 25	0 3/32	5.573	4.350	3.923	5.715	6.539	5/16	90°	681	507	319	0.190	**034G5035**
ETS 6 – 32	0 1/8	8.189	6.397	5.772	8.416	9.639	5/16	90°	681	406	174	0.280	**034G5055**
ETS 6 – 40	0 5/32	11.117	8.700	7.847	11.430	13.079	5/16	90°	681	304	101	0.380	**034G5065**
I-pack (100 units per box)													
ETS 6 – 08	0 1/32	0.426	0.341	0.312	0.454	0.511	1/4	90°	681	507	290	0.013	**034G5090**
ETS 6 – 10	0 3/64	0.739	0.568	0.512	0.767	0.881	5/16	90°	681	507	507	0.035	**034G5000**
ETS 6 – 14	0 1/16	1.649	1.279	1.165	1.677	1.933	5/16	90°	681	507	290	0.060	**034G5010**
ETS 6 – 18[2]	0 5/64	2.928	2.303	2.075	3.014	3.440	1/4	90°	681	507	406	0.099	**034G5024**
ETS 6 – 25	0 3/32	5.573	4.350	3.923	5.715	6.539	5/16	90°	681	507	319	0.190	**034G5030**
ETS 6 – 32	0 1/8	8.189	6.397	5.772	8.416	9.639	5/16	90°	681	406	174	0.280	**034G5050**
ETS 6 – 40	0 5/32	11.117	8.700	7.847	11.430	13.079	5/16	90°	681	304	101	0.380	**034G5060**

Nominal capacity based on:

t_c = 100 °F, t_e = 41 °F, SC = 32 °F, SH = 32 °F

* Please contact Danfoss if higher maximum reverse pressure valve is required.

[1] Max. Reverse Pressure = Pressure as which the valve can still close tightly in reverse direction (from A to B see fig. 1).

[2] For other connection size, please contact Danfoss - ETS 6 – 18.

Product identification

Valve

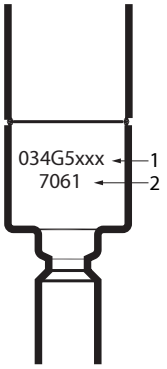

1. Danfoss code no.
2. Manufacturing no.

Coil

Manufacturing no.

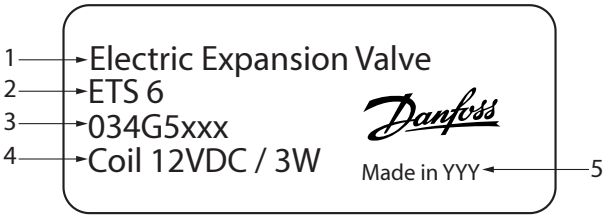

1. Product designation Type
2. Danfoss code no.
3. Technical data
4. Country of origin

Coil ordering



Model no.	Voltage (current)	Enclosure	Insulation class	Cable length [m]	Cable length [in.]	Connector	Units per box	Single pack code no.
Single pack								
ETS 6 Coil	12 V DC (0.26 A/phase)	IP 66	Class "E" (UL Class 105 (A))	0.7	27.5	JST XHP-6	1	**034G5105**
				0.7	27.5	JST XHP-5	1	**034G5115**
				1.5	59.0	JST XHP 5	1	**034G5145**
				2.0	78.7	JST XHP 5	1	**034G5185**
				3.0	118.0	JST XHP 5	1	**034G5135**
				0.6	23.6	AMP UPC- 6	1	**034G5175**
I-pack								
ETS 6 Coil	12 V DC (0.26 A/phase)	IP 66	Class "E" (UL Class 105 (A))	0.7	27.5	JST XHP-6	100	**034G5100**
				0.7	27.5	JST XHP-5	100	**034G5110**
				1.5	59.0	JST XHP 5	100	**034G5140**
				2.0	78.7	JST XHP 5	100	**034G5180**
				3.0	118.0	JST XHP 5	40	**034G5130**
				3.0	118.0	JST XHP 6	40	**034G5150**
				0.6	23.6	AMP UPC- 6	100	**034G5170**

For the Danfoss controller select a ETS 6 coil with JST XHP-5 connector

Spare parts code numbers



034G5199

Elec. expansion valve coil, ETS 6

Used for product: ETS 6

Related products

034G5100 034G5105 034G5110 034G5115 034G5130 034G5135 034G5140 034G5145 034G5150 034G5170 034G5175 034G5180 034G5185



034G0013

Service driver, For AST-G motor

Type designation: AST-G service driver, Used for product comments: For AST-G motor, Packing format: Single pack, Quantity per packing format: 1

Related products

034G5100 034G5105 034G5110 034G5115 034G5130 034G5135 034G5140 034G5145 034G5150 034G5170 034G5175 034G5180 034G5185

Overview

Application examples

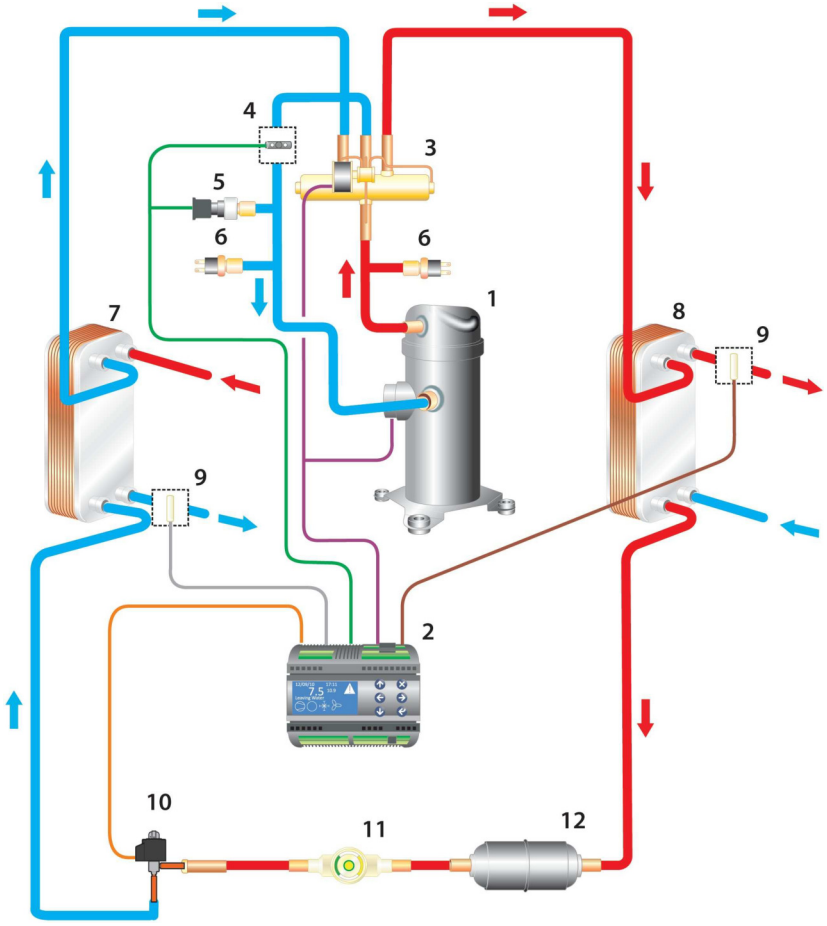

Heat pump components in typical system.
1. Compressor.
2. Controller.
3. Four-way valve.
4. Temperature sensor.
5. Pressure transmitter.
6. Cartridge pressure control.
7. Evaporator.
8. Condenser.
9. Temperature sensor.
10. Electric expansion valve.
11. Sight glass.
12. Liquid line filter drier.

Product details

General data

Valve data

Flow characteristic	Bi-flow.
Maximum working pressure	47 bar / 681 psig.
Compatible refrigerants	R22, R32, R134a, R290, R404A, R407C, R407H, R410A, R448, R449A, R452A, R452B, R454C, R463A, R513A, R1234yf (for flammable refrigerants follow EN 378 standard)
Refrigerant oil	All mineral oils and ester oils (to lubricate ETS 6 valve).
Ambient temperature	-30 – 70 °C / -22 – 158 °F
Fluid Temperature *(measured at the inlet of the valve like the image below)*	-30 – 70 °C / -22 – 158 °F
Durability	Tested for 60 million total pulses supplies to the valve during partially open valve, which is comparable to 150,000 cycles if the valve is operated between 100 to 300 pulses open. Tested for 30,000 full stroke cycles including 20 pulse overdrive at each closing.
Ambient humidity	95% RH or less.
Capacity control range	10% – 100 %

Electrical data

Modulation	Permanent magnet type direct operating stepper motor.
Excitation method	1 – 2 phase.
Electrical connection	JST XHP-6, JST XHP-5 and AMP connection.
Excitation speed	Min. 30 pps (pulses per second) to max. 90 pps, recommended 31 pps.
Operating range	0 to 480 pulses, no holding power required (NOTE: do not apply more than 520 pulses).
Full motion transit time	e.g. 16 sec @ 30 pps, 6 sec @ 80 pps
Installation position Liquid line solenoid valve	With coil on the upper side and the valve/coil assembly within ±15˚of the vertical axis If using a liquid line solenoid valve, it must be installed in such a way that it does not create liquid hammering this ETS 6 valve.
Max. coil winding temperature	115 °C / 239 °F
Compatible Danfoss controller	EKE 1A, EKE 1B, EKE 1C, EIM 336 (for OEM only).

Flow characteristics

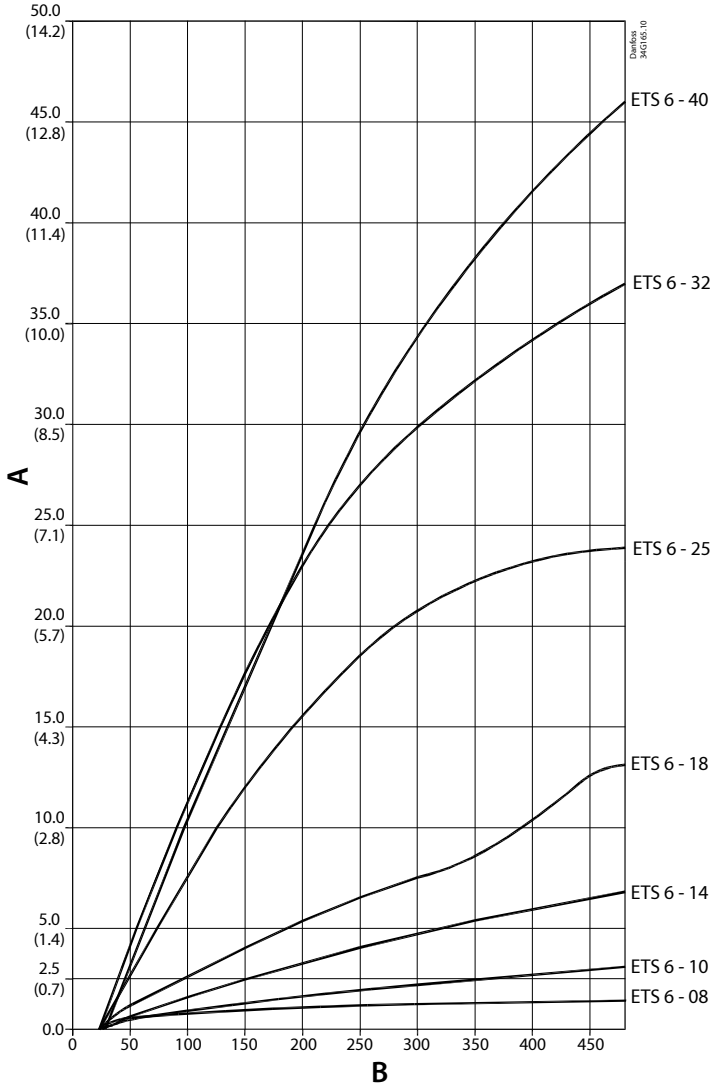

Conditions R410 A

T_e: 5 °C / 41 °F

T_c: 38 °C / 100.4 °F

Subcooling: 0 °C / 32 °F

Superheat: 0 °C / 32 °F

Flow B to A

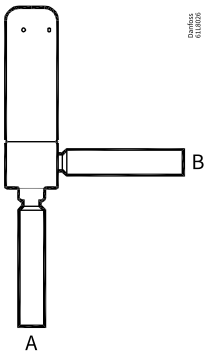

A outlet
B inlet

Valve Selection

For optimum performance, it is important to correct the evaporator capacity. In order to select the correct size of ETS 6 you will need the following information:
Refrigerant: HCFC / HFC
Evaporator capacity Q_e in kW or TR
Evaporating temperature t_e in °C / °F
Condenser temperature t_c in °C / °F
Subcooling Δt_{sub} in K / °F

Example

When selecting the valve it may be necessary to apply a correction factor to the actual evaporator capacity. This correction factor is required when system conditions are different than table conditions. Selection also depends on having an acceptable pressure drop across the valve.

In the selection table, the pressure drop in the liquid line is assumed to be zero. The following example illustrates correct selection of the valve.

Refrigerant: R407C
Evaporator capacity: Qe = 10 kW / 2.84 TR
Condensing temperature: tc = 40 °C / 104 °F
Evaporating temperature: te = +10 °C / 50 °F
Subcooling Δtsub = 10 K / 18 °F

Note: ***Coolselector®2*** *is a Danfoss calculation and selection software designed to make selection processes for all refrigeration projects easier and less time consuming. For details refer* ***https://coolselector.danfoss.com***

Step 1

Determine the correction factor for subcooling Δt_{sub}. From the correction factor table (see below) a subcooling of 10 K, R407C corresponds to a factor of 1.14.
Correction factors for subcooling $\Delta t_{sub.}$

ΔTsc	0K	4K	10K	15K	20K	25K	30K	35K	40K	45K	50K
	0 °F	7.2 °F	18 °F	27 °F	36 °F	45 °F	54 °F	63 °F	72 °F	81 °F	90 °F
R22	1.00	1.04	1.10	1.16	1.20	1.25	1.30	1.35	1.41	1.45	1.50
R410A	1.00	1.06	1.14	1.21	1.28	1.34	1.40	1.47	1.53	1.58	1.65
R407C	1.00	1.06	**1.14**	1.20	1.28	1.34	1.40	1.47	1.53	1.60	1.66
R134a	1.00	1.06	1.14	1.19	1.26	1.32	1.38	1.45	1.50	1.56	1.63
R404A	1.00	1.07	1.18	1.29	1.38	1.47	1.56	1.65	1.75	1.82	1.91

Step 2

Corrected evaporator capacity is
Q_e (Corrected) = 10 kW / 1.14 = 8.8 kW / 2.5 TR

Step 3

Select the appropriate capacity table, R407C, and choose the column for condensing temperature of t_c = 40 °C / 104 °F and evaporating temperature of t_e = 10 °C / 50 °F which will provide an equivalent or greater capacity of 8.8 kW / 2.5 TR. ETS 6 – 18 provides 10.35 kW / 2.94 TR, which is the proper selection for this example.

Step 4

Choose ETS 6 –18:
- Single pack code no. 034G5026
- I-pack code no. 034G5024

Design

Design/function

The ETS 6 Electric expansion valves open and close to regulate refrigerant flow by means of a screw, whose rotating motion is transformed into linear motion. This occurs by the rotation of a magnet-needle valve assembly which moves when electrical signals are applied to the surrounding coil.

Within the coil structure, there are different winding configurations, and the polarities are changed by the electrical signals applied. By application of the appropriate combination of signals, in the form of pulses, the coil forces the rotor of the valve to move in a stepwise fashion.

Application of multiple pulses will make the valve mechanism to move through a series of steps in the chosen direction, in order to set the valve with the required opening degree.

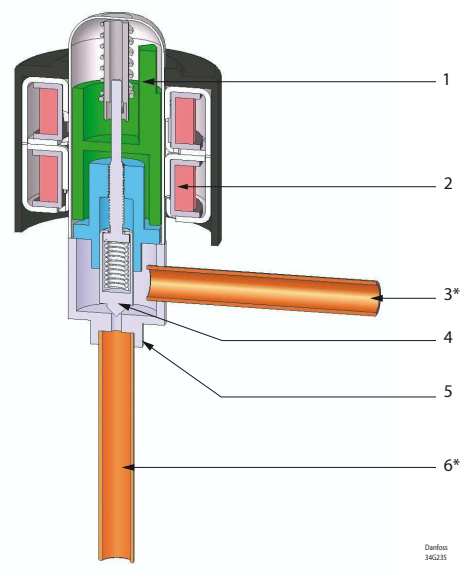

1	Permanent magnet motor
2	Coil
3*	Inlet (B*)
4	Needle valve
5	Valve body
6*	Outlet (A*)

Capacity

Rated Capacity (kW)

	Condensing temperature (°C)	ETS 6 – 18						
		Evaporation temperature (°C)						
		10	5	0	-5	-10	-20	-30
R410A	30	10.35	11.21	11.88	12.41	12.81	13.31	13.52
	35	11.15	11.84	12.38	12.79	13.10	13.47	13.58
	38	11.51	12.11	12.58	12.94	13.20	13.50	13.55
	40	11.70	12.25	12.67	13.00	13.23	13.48	13.50
	45	12.00	12.44	12.77	13.02	13.19	13.33	13.27
	50	12.07	12.41	12.66	12.84	12.95	13.00	12.86
R407C	30	8.95	9.61	10.11	10.48	10.74	11.02	11.06
	35	9.75	10.26	10.65	10.92	11.11	11.27	11.22
	38	10.13	10.57	10.90	11.13	11.28	11.38	11.28
	40	**10.35**	10.75	11.04	11.24	11.36	11.42	11.30
	45	10.79	11.09	11.30	11.43	11.50	11.47	11.27
	50	11.06	11.28	11.42	11.49	11.50	11.39	11.13
R22	30	8.59	9.27	9.80	10.22	10.53	10.92	11.07
	35	9.41	9.96	10.38	10.71	10.96	11.24	11.33

Correction factors for subcooling Δt_{sub}

The evaporator capacities used must be corrected if subcooling deviates from 0 K. The corrected capacity can be obtained by dividing the required evaporator capacity by the correction factor below. Selections can then be made from the tables above.

Δt_{sub}	0K	4K	10K	15K	20K	25K	30K	35K	40K	45K	50K
	0 °F	7.2 °F	18 °F	27 °F	36 °F	45 °F	54 °F	63 °F	72 °F	81 °F	90 °F
R22	1.00	1.04	1.10	1.16	1.20	1.25	1.30	1.35	1.41	1.45	1.50
R410A	1.00	1.06	1.14	1.21	1.28	1.34	1.40	1.47	1.53	1.58	1.65
R407C	1.00	1.06	1.14	1.20	1.28	1.34	1.40	1.47	1.53	1.60	1.66
R134a	1.00	1.06	1.14	1.19	1.26	1.32	1.38	1.45	1.50	1.56	1.63
R404A/R507	1.00	1.07	1.18	1.29	1.38	1.47	1.56	1.65	1.75	1.82	1.91

Δt_{sub}	0K	4K	10K	15K	20K	25K	30K	35K	40K	45K	50K
	0 °F	7.2 °F	18 °F	27 °F	36 °F	45 °F	54 °F	63 °F	72 °F	81 °F	90 °F
R32	1.00	1.03	1.08	1.12	1.16	1.20	1.23	1.27	1.31	1.34	1.37
R290	1.00	1.04	1.10	1.15	1.20	1.25	1.29	1.34	1.38	1.43	1.47
R448A	1.00	1.06	1.13	1.20	1.26	1.33	1.39	1.46	1.52	1.59	1.65
R449A	1.00	1.03	1.11	1.17	1.23	1.29	1.35	1.41	1.47	1.53	1.59
R452A	1.00	1.06	1.14	1.21	1.25	1.34	1.40	1.46	1.52	1.58	1.64

Capacity (kW)

SI units

	Condensing temperature (°C)	ETS 6 – 08						
		Evaporation temperature [°C]						
		10	5	0	-5	-10	-20	-30
R22	30	1.27	1.37	1.45	1.51	1.56	1.62	1.64
	35	1.39	1.47	1.54	1.59	1.62	1.66	1.68
	38	1.45	1.52	1.58	1.62	1.65	1.69	1.69
	40	1.49	1.55	1.61	1.64	1.67	1.70	1.70
	45	1.56	1.62	1.66	1.69	1.71	1.72	1.72
	50	1.62	1.66	1.69	1.72	1.73	1.73	1.72
R134a	30	1.01	1.08	1.13	1.16	1.19	1.20	1.20
	35	1.10	1.15	1.19	1.22	1.23	1.23	1.22
	38	1.15	1.19	1.22	1.24	1.25	1.25	1.22
	40	1.17	1.21	1.24	1.25	1.26	1.25	1.23
	45	1.23	1.26	1.27	1.28	1.28	1.26	1.22
	50	1.27	1.28	1.29	1.29	1.28	1.26	1.21
R404A	30	0.95	1.01	1.06	1.10	1.12	1.14	1.12
	35	1.01	1.06	1.10	1.12	1.13	1.13	1.11
	38	1.03	1.07	1.10	1.12	1.13	1.12	1.09
	40	1.04	1.08	1.10	1.11	1.12	1.11	1.07
	45	1.05	1.08	1.09	1.09	1.09	1.07	1.02
	50	1.04	1.05	1.05	1.05	1.04	1.01	0.96
R407C	30	1.32	1.42	1.50	1.55	1.59	1.63	1.64
	35	1.44	1.52	1.58	1.62	1.64	1.67	1.66
	38	1.50	1.56	1.61	1.65	1.67	1.68	1.67
	40	1.53	1.59	1.63	1.66	1.68	1.69	1.67
	45	1.60	1.64	1.67	1.69	1.70	1.70	1.67
	50	1.64	1.67	1.69	1.70	1.70	1.69	1.65
R410A	30	1.53	1.66	1.76	1.84	1.90	1.97	2.00
	35	1.65	1.75	1.83	1.89	1.94	1.99	2.01
	38	1.70	1.79	1.86	1.91	1.95	2.00	2.01
	40	1.73	1.81	1.88	1.92	1.96	2.00	2.00
	45	1.78	1.84	1.89	1.93	1.95	1.97	1.96
	50	1.79	1.84	1.87	1.90	1.92	1.92	1.90

Capacity (kW)

SI units

	Condensing temperature (°C)	ETS 6 – 08						
		Evaporation temperature [°C]						
		10	5	0	-5	-10	-20	-30
R32	30	2.19	2.39	2.54	2.67	2.77	2.91	2.99
	35	2.40	2.56	2.69	2.79	2.88	2.99	3.05
	38	2.49	2.64	2.76	2.85	2.93	3.03	3.08
	40	2.55	2.69	2.80	2.88	2.95	3.05	3.10
	45	2.66	2.78	2.87	2.94	3.00	3.08	3.11
	50	2.74	2.83	2.91	2.97	3.02	3.08	3.10
R290	30	1.36	1.45	1.53	1.58	1.62	1.66	1.66
	35	1.47	1.54	1.60	1.64	1.66	1.68	1.67
	38	1.52	1.59	1.63	1.66	1.68	1.69	1.67
	40	1.55	1.61	1.65	1.68	1.69	1.69	1.67
	45	1.61	1.65	1.68	1.69	1.70	1.69	1.65
	50	1.65	1.67	1.69	1.70	1.69	1.66	1.61
R448A	30	1.37	1.48	1.50	1.59	1.56	1.58	1.58
	35	1.47	1.56	1.56	1.64	1.60	1.61	1.58
	38	1.48	1.56	1.56	1.63	1.60	1.59	1.57
	40	1.50	1.57	1.57	1.63	1.60	1.59	1.56
	45	1.53	1.59	1.58	1.63	1.59	1.57	1.53
	50	1.53	1.58	1.56	1.61	1.56	1.53	1.48
R449A	30	1.35	1.42	1.47	1.51	1.54	1.56	1.55
	35	1.42	1.48	1.52	1.55	1.56	1.57	1.55
	38	1.46	1.50	1.54	1.56	1.57	1.57	1.54
	40	1.47	1.52	1.54	1.56	1.57	1.56	1.53
	45	1.50	1.53	1.55	1.56	1.56	1.54	1.50
	50	1.51	1.53	1.54	1.54	1.53	1.50	1.46
R452A	30	1.06	1.12	1.15	1.18	1.20	1.20	1.18
	35	1.11	1.15	1.18	1.19	1.20	1.19	1.16
	38	1.13	1.16	1.18	1.19	1.19	1.17	1.14
	40	1.13	1.16	1.18	1.18	1.18	1.16	1.12
	45	1.14	1.15	1.16	1.16	1.15	1.12	1.07
	50	1.11	1.12	1.12	1.11	1.10	1.06	1.00

Capacity (kW)

SI units

	Condensing temperature (°C)	ETS 6 – 10						
		Evaporation temperature [°C]						
		10	5	0	-5	-10	-20	-30
R22	30	2.15	2.32	2.45	2.55	2.63	2.73	2.77
	35	2.35	2.49	2.60	2.68	2.74	2.81	2.83
	38	2.45	2.58	2.67	2.74	2.79	2.85	2.86
	40	2.52	2.63	2.71	2.78	2.82	2.87	2.88
	45	2.64	2.73	2.80	2.85	2.88	2.91	2.90
	50	2.74	2.81	2.86	2.90	2.92	2.93	2.90
R134a	30	1.71	1.82	1.91	1.97	2.01	2.04	2.02
	35	1.86	1.95	2.01	2.05	2.08	2.09	2.05
	38	1.94	2.01	2.06	2.09	2.11	2.11	2.07
	40	1.98	2.05	2.09	2.12	2.13	2.12	2.07
	45	2.08	2.12	2.15	2.16	2.16	2.13	2.07
	50	2.14	2.17	2.18	2.18	2.17	2.12	2.05
R404A	30	1.60	1.71	1.80	1.85	1.89	1.92	1.90
	35	1.71	1.79	1.85	1.89	1.91	1.91	1.88
	38	1.75	1.82	1.86	1.89	1.90	1.89	1.84
	40	1.76	1.82	1.86	1.88	1.89	1.87	1.81
	45	1.78	1.82	1.84	1.85	1.84	1.80	1.73
	50	1.75	1.77	1.78	1.77	1.76	1.70	1.61
R407C	30	2.24	2.40	2.53	2.62	2.69	2.76	2.76
	35	2.44	2.57	2.66	2.73	2.78	2.82	2.81
	38	2.53	2.64	2.72	2.78	2.82	2.84	2.82
	40	2.59	2.69	2.76	2.81	2.84	2.86	2.82
	45	2.70	2.77	2.82	2.86	2.87	2.87	2.82
	50	2.77	2.82	2.85	2.87	2.88	2.85	2.78
R410A	30	2.59	2.80	2.97	3.10	3.20	3.33	3.38
	35	2.79	2.96	3.09	3.20	3.28	3.37	3.39
	38	2.88	3.03	3.14	3.23	3.30	3.37	3.39
	40	2.92	3.06	3.17	3.25	3.31	3.37	3.37
	45	3.00	3.11	3.19	3.25	3.30	3.33	3.32
	50	3.02	3.10	3.17	3.21	3.24	3.25	3.21

Capacity (kW)

SI units

	Condensing temperature (°C)	ETS 6 – 10						
		Evaporation temperature [°C]						
		10	5	0	-5	-10	-20	-30
R32	30	2.15	2.32	2.45	2.55	2.63	2.73	2.77
	35	2.35	2.49	2.60	2.68	2.74	2.81	2.83
	38	2.45	2.58	2.67	2.74	2.79	2.85	2.86
	40	2.52	2.63	2.71	2.78	2.82	2.87	2.88
	45	2.64	2.73	2.80	2.85	2.88	2.91	2.90
	50	2.74	2.81	2.86	2.90	2.92	2.93	2.90
R290	30	1.71	1.82	1.91	1.97	2.01	2.04	2.02
	35	1.86	1.95	2.01	2.05	2.08	2.09	2.05
	38	1.94	2.01	2.06	2.09	2.11	2.11	2.07
	40	1.98	2.05	2.09	2.12	2.13	2.12	2.07
	45	2.08	2.12	2.15	2.16	2.16	2.13	2.07
	50	2.14	2.17	2.18	2.18	2.17	2.12	2.05
R448A	30	1.60	1.71	1.80	1.85	1.89	1.92	1.90
	35	1.71	1.79	1.85	1.89	1.91	1.91	1.88
	38	1.75	1.82	1.86	1.89	1.90	1.89	1.84
	40	1.76	1.82	1.86	1.88	1.89	1.87	1.81
	45	1.78	1.82	1.84	1.85	1.84	1.80	1.73
	50	1.75	1.77	1.78	1.77	1.76	1.70	1.61
R449A	30	2.24	2.40	2.53	2.62	2.69	2.76	2.76
	35	2.44	2.57	2.66	2.73	2.78	2.82	2.81
	38	2.53	2.64	2.72	2.78	2.82	2.84	2.82
	40	2.59	2.69	2.76	2.81	2.84	2.86	2.82
	45	2.70	2.77	2.82	2.86	2.87	2.87	2.82
	50	2.77	2.82	2.85	2.87	2.88	2.85	2.78
R452A	30	2.59	2.80	2.97	3.10	3.20	3.33	3.38
	35	2.79	2.96	3.09	3.20	3.28	3.37	3.39
	38	2.88	3.03	3.14	3.23	3.30	3.37	3.39
	40	2.92	3.06	3.17	3.25	3.31	3.37	3.37
	45	3.00	3.11	3.19	3.25	3.30	3.33	3.32
	50	3.02	3.10	3.17	3.21	3.24	3.25	3.21

Capacity (kW)

SI units

	Condensing temperature (°C)	ETS 6 – 14						
		Evaporation temperature [°C]						
		10	5	0	-5	-10	-20	-30
R22	30	4.81	5.19	5.49	5.72	5.89	6.11	6.20
	35	5.27	5.58	5.82	6.00	6.14	6.30	6.34
	38	5.50	5.77	5.98	6.14	6.26	6.39	6.41
	40	5.63	5.88	6.07	6.22	6.32	6.43	6.44
	45	5.92	6.12	6.27	6.38	6.46	6.52	6.50
	50	6.14	6.29	6.41	6.49	6.54	6.56	6.51
R134a	30	3.82	4.08	4.27	4.40	4.49	4.56	4.53
	35	4.17	4.37	4.51	4.60	4.65	4.67	4.60
	38	4.35	4.51	4.62	4.69	4.73	4.72	4.63
	40	4.45	4.59	4.69	4.74	4.77	4.74	4.64
	45	4.65	4.75	4.81	4.84	4.84	4.77	4.63
	50	4.79	4.85	4.88	4.88	4.86	4.75	4.59
R404A	30	3.58	3.84	4.02	4.15	4.24	4.30	4.25
	35	3.83	4.01	4.15	4.23	4.28	4.29	4.20
	38	3.91	4.07	4.17	4.23	4.26	4.24	4.13
	40	3.94	4.08	4.16	4.21	4.23	4.19	4.06
	45	3.98	4.07	4.12	4.13	4.12	4.04	3.88
	50	3.92	3.97	3.98	3.97	3.93	3.81	3.61
R407C	30	5.01	5.38	5.66	5.87	6.02	6.17	6.19
	35	5.46	5.75	5.96	6.12	6.22	6.31	6.29
	38	5.67	5.92	6.10	6.23	6.31	6.37	6.32
	40	5.80	6.02	6.18	6.29	6.36	6.40	6.33
	45	6.04	6.21	6.33	6.40	6.44	6.42	6.31
	50	6.19	6.32	6.39	6.43	6.44	6.38	6.23
R410A	30	5.80	6.28	6.66	6.95	7.17	7.46	7.57
	35	6.25	6.63	6.93	7.16	7.34	7.55	7.60
	38	6.44	6.78	7.04	7.24	7.39	7.56	7.59
	40	6.55	6.86	7.10	7.28	7.41	7.55	7.56
	45	6.72	6.97	7.15	7.29	7.39	7.47	7.43
	50	6.76	6.95	7.09	7.19	7.25	7.28	7.20

Capacity (kW)

SI units

	Condensing temperature (°C)	ETS 6 – 14						
		Evaporation temperature [°C]						
		10	5	0	-5	-10	-20	-30
R32	30	8.30	9.04	9.63	10.10	10.48	11.02	11.32
	35	9.06	9.67	10.16	10.56	10.88	11.32	11.56
	38	9.44	9.98	10.43	10.78	11.07	11.46	11.66
	40	9.65	10.16	10.58	10.91	11.18	11.54	11.71
	45	10.08	10.51	10.86	11.14	11.36	11.65	11.77
	50	10.36	10.72	11.02	11.25	11.43	11.65	11.72
R290	30	5.13	5.50	5.78	5.98	6.13	6.27	6.27
	35	5.56	5.84	6.05	6.20	6.30	6.37	6.31
	38	5.76	6.00	6.18	6.29	6.36	6.40	6.31
	40	5.88	6.09	6.24	6.34	6.40	6.40	6.30
	45	6.10	6.25	6.36	6.41	6.43	6.38	6.23
	50	6.23	6.34	6.39	6.41	6.40	6.29	6.10
R448A	30	5.19	5.61	5.67	6.02	5.91	5.99	5.96
	35	5.56	5.89	5.90	6.19	6.06	6.08	6.00
	38	5.60	5.91	5.91	6.17	6.04	6.03	5.94
	40	5.67	5.96	5.94	6.18	6.04	6.02	5.91
	45	5.80	6.02	5.97	6.16	6.00	5.93	5.78
	50	5.80	5.98	5.91	6.07	5.90	5.80	5.62
R449A	30	5.11	5.38	5.58	5.73	5.82	5.90	5.87
	35	5.39	5.60	5.75	5.86	5.92	5.94	5.87
	38	5.52	5.69	5.82	5.90	5.94	5.94	5.84
	40	5.58	5.74	5.84	5.91	5.94	5.92	5.81
	45	5.68	5.80	5.86	5.90	5.90	5.84	5.69
	50	5.70	5.77	5.81	5.82	5.80	5.69	5.51
R452A	30	4.01	4.22	4.37	4.47	4.52	4.54	4.46
	35	4.20	4.35	4.45	4.51	4.53	4.50	4.38
	38	4.26	4.38	4.46	4.50	4.51	4.44	4.30
	40	4.29	4.39	4.45	4.48	4.48	4.40	4.24
	45	4.30	4.36	4.39	4.38	4.35	4.23	4.04
	50	4.22	4.24	4.24	4.21	4.16	4.00	3.78

Capacity (kW)

SI units

	Condensing temperature (°C)	ETS 6 – 18						
		Evaporation temperature [°C]						
		10	5	0	-5	-10	-20	-30
R22	30	8.59	9.27	9.80	10.22	10.53	10.92	11.07
	35	9.41	9.96	10.38	10.71	10.96	11.24	11.33
	38	9.82	10.30	10.68	10.96	11.17	11.40	11.44
	40	10.06	10.50	10.85	11.11	11.29	11.49	11.50
	45	10.57	10.93	11.20	11.40	11.53	11.65	11.60
	50	10.96	11.24	11.45	11.59	11.68	11.72	11.62
R134a	30	6.83	7.29	7.63	7.87	8.02	8.14	8.08
	35	7.45	7.80	8.05	8.21	8.31	8.34	8.21
	38	7.76	8.05	8.25	8.38	8.44	8.42	8.26
	40	7.94	8.20	8.37	8.47	8.52	8.46	8.28
	45	8.31	8.49	8.59	8.64	8.64	8.52	8.27
	50	8.56	8.67	8.72	8.72	8.68	8.49	8.19
R404A	30	6.40	6.85	7.18	7.41	7.56	7.67	7.60
	35	6.83	7.17	7.41	7.56	7.65	7.66	7.51
	38	6.99	7.26	7.45	7.56	7.61	7.57	7.38
	40	7.04	7.28	7.43	7.52	7.55	7.47	7.25
	45	7.11	7.27	7.35	7.38	7.36	7.21	6.92
	50	7.00	7.08	7.11	7.09	7.03	6.80	6.45
R407C	30	8.95	9.61	10.11	10.48	10.74	11.02	11.06
	35	9.75	10.26	10.65	10.92	11.11	11.27	11.22
	38	10.13	10.57	10.90	11.13	11.28	11.38	11.28
	40	10.35	10.75	11.04	11.24	11.36	11.42	11.30
	45	10.79	11.09	11.30	11.43	11.50	11.47	11.27
	50	11.06	11.28	11.42	11.49	11.50	11.39	11.13
R410A	30	10.35	11.21	11.88	12.41	12.81	13.31	13.52
	35	11.15	11.84	12.38	12.79	13.10	13.47	13.58
	38	11.51	12.11	12.58	12.94	13.20	13.50	13.55
	40	11.70	12.25	12.67	13.00	13.23	13.48	13.50
	45	12.00	12.44	12.77	13.02	13.19	13.33	13.27
	50	12.07	12.41	12.66	12.84	12.95	13.00	12.86

Capacity (kW)

SI units

	Condensing temperature (°C)	ETS 6 – 18						
		Evaporation temperature [°C]						
		10	5	0	-5	-10	-20	-30
R32	30	14.83	16.14	17.19	18.04	18.72	19.67	20.21
	35	16.18	17.27	18.15	18.86	19.43	20.22	20.64
	38	16.85	17.82	18.62	19.26	19.77	20.47	20.82
	40	17.24	18.14	18.89	19.48	19.96	20.60	20.91
	45	18.01	18.77	19.40	19.90	20.29	20.80	21.02
	50	18.50	19.15	19.67	20.09	20.41	20.80	20.93
R290	30	9.16	9.83	10.32	10.69	10.94	11.20	11.20
	35	9.92	10.43	10.81	11.07	11.24	11.37	11.27
	38	10.29	10.72	11.03	11.24	11.37	11.42	11.27
	40	10.50	10.88	11.15	11.33	11.42	11.43	11.25
	45	10.89	11.17	11.35	11.45	11.49	11.39	11.13
	50	11.10	11.31	11.42	11.45	11.43	11.24	10.90
R448A	30	9.26	10.02	10.12	10.75	10.56	10.70	10.64
	35	9.92	10.53	10.54	11.05	10.82	10.85	10.71
	38	10.00	10.56	10.55	11.02	10.78	10.78	10.60
	40	10.13	10.64	10.61	11.04	10.79	10.75	10.55
	45	10.35	10.75	10.66	11.00	10.72	10.59	10.32
	50	10.35	10.69	10.56	10.85	10.54	10.35	10.03
R449A	30	9.12	9.61	9.96	10.23	10.39	10.54	10.48
	35	9.63	10.00	10.27	10.46	10.57	10.61	10.47
	38	9.85	10.17	10.39	10.53	10.61	10.60	10.42
	40	9.96	10.25	10.44	10.56	10.61	10.57	10.37
	45	10.15	10.35	10.47	10.54	10.54	10.42	10.15
	50	10.17	10.31	10.37	10.39	10.35	10.16	9.83
R452A	30	7.16	7.54	7.80	7.98	8.08	8.11	7.97
	35	7.49	7.76	7.94	8.05	8.09	8.03	7.82
	38	7.61	7.83	7.97	8.03	8.05	7.94	7.68
	40	7.66	7.85	7.96	8.00	7.99	7.85	7.57
	45	7.67	7.79	7.83	7.83	7.77	7.55	7.22
	50	7.53	7.58	7.57	7.52	7.42	7.14	6.75

Capacity (kW)

SI units

	Condensing temperature (°C)	ETS 6 – 25						
		Evaporation temperature [°C]						
		10	5	0	-5	-10	-20	-30
R22	30	16.36	17.67	18.69	19.47	20.06	20.81	21.11
	35	17.93	18.98	19.79	20.42	20.88	21.43	21.59
	38	18.71	19.63	20.35	20.89	21.29	21.73	21.81
	40	19.17	20.02	20.67	21.17	21.52	21.89	21.92
	45	20.15	20.83	21.35	21.72	21.98	22.20	22.11
	50	20.88	21.42	21.81	22.09	22.26	22.34	22.14
R134a	30	13.01	13.90	14.55	14.99	15.29	15.52	15.40
	35	14.21	14.87	15.35	15.66	15.84	15.90	15.65
	38	14.79	15.35	15.73	15.97	16.09	16.05	15.74
	40	15.13	15.62	15.95	16.14	16.23	16.13	15.78
	45	15.83	16.17	16.38	16.47	16.47	16.23	15.77
	50	16.31	16.52	16.62	16.62	16.54	16.18	15.61
R404A	30	12.20	13.06	13.69	14.13	14.42	14.63	14.48
	35	13.03	13.66	14.11	14.41	14.57	14.59	14.30
	38	13.32	13.84	14.20	14.41	14.51	14.43	14.06
	40	13.42	13.87	14.17	14.33	14.39	14.24	13.82
	45	13.55	13.85	14.01	14.07	14.04	13.74	13.19
	50	13.33	13.50	13.55	13.51	13.39	12.95	12.30
R407C	30	17.05	18.32	19.28	19.98	20.48	21.01	21.07
	35	18.58	19.56	20.29	20.82	21.18	21.49	21.39
	38	19.31	20.15	20.77	21.21	21.49	21.69	21.50
	40	19.73	20.49	21.04	21.42	21.66	21.78	21.54
	45	20.57	21.14	21.54	21.79	21.91	21.86	21.48
	50	21.08	21.50	21.76	21.90	21.93	21.71	21.21
R410A	30	19.73	21.37	22.65	23.64	24.41	25.37	25.76
	35	21.26	22.56	23.59	24.38	24.97	25.68	25.88
	38	21.93	23.08	23.97	24.65	25.16	25.72	25.82
	40	22.29	23.34	24.15	24.77	25.22	25.70	25.73
	45	22.88	23.71	24.35	24.81	25.13	25.41	25.28
	50	23.00	23.65	24.13	24.47	24.68	24.77	24.50

Capacity (kW)

SI units

	Condensing temperature (°C)	ETS 6 – 25						
		Evaporation temperature [°C]						
		10	5	0	-5	-10	-20	-30
R32	30	28.26	30.75	32.76	34.38	35.67	37.50	38.53
	35	30.84	32.90	34.59	35.95	37.03	38.54	39.34
	38	32.11	33.97	35.48	36.70	37.68	39.01	39.69
	40	32.85	34.58	35.99	37.13	38.04	39.26	39.86
	45	34.32	35.78	36.97	37.92	38.67	39.64	40.05
	50	35.27	36.50	37.49	38.28	38.89	39.64	39.89
R290	30	17.40	18.67	19.62	20.31	20.79	21.27	21.27
	35	18.85	19.82	20.53	21.03	21.36	21.60	21.41
	38	19.55	20.37	20.95	21.35	21.60	21.70	21.42
	40	19.94	20.67	21.18	21.52	21.71	21.73	21.38
	45	20.70	21.22	21.57	21.76	21.83	21.65	21.14
	50	21.15	21.50	21.69	21.76	21.72	21.36	20.71
R448A	30	17.65	19.11	19.28	20.48	20.12	20.40	20.29
	35	18.91	20.26	20.09	21.06	20.62	20.68	20.41
	38	19.06	20.12	20.11	21.00	20.54	20.54	20.20
	40	19.30	20.28	20.22	21.05	20.57	20.49	20.11
	45	19.73	20.49	20.32	20.97	20.43	20.18	19.66
	50	19.73	20.37	20.13	20.67	20.09	19.73	19.11
R449A	30	17.38	18.31	18.99	19.49	19.81	20.09	19.96
	35	18.35	19.07	19.58	19.93	20.14	20.23	19.96
	38	18.77	19.38	19.79	20.08	20.22	20.20	19.86
	40	18.99	19.53	19.89	20.13	20.23	20.15	19.76
	45	19.34	19.73	19.96	20.09	20.09	19.86	19.35
	50	19.39	19.65	19.77	19.80	19.73	19.36	18.74
R452A	30	13.65	14.36	14.87	15.20	15.39	15.45	15.18
	35	14.28	14.79	15.14	15.34	15.42	15.31	14.90
	38	14.51	14.92	15.18	15.31	15.34	15.12	14.64
	40	14.60	14.95	15.16	15.25	15.23	14.96	14.43
	45	14.63	14.84	14.93	14.92	14.82	14.40	13.76
	50	14.35	14.44	14.43	14.33	14.15	13.60	12.86

Capacity (kW)

SI units

	Condensing temperature (°C)	ETS 6 – 32						
		Evaporation temperature [°C]						
		10	5	0	-5	-10	-20	-30
R22	30	24.0	26.0	27.5	28.6	29.5	30.6	31.0
	35	26.3	27.9	29.1	30.0	30.7	31.5	31.7
	38	27.5	28.8	29.9	30.7	31.3	31.9	32.0
	40	28.2	29.4	30.4	31.1	31.6	32.2	32.2
	45	29.6	30.6	31.4	31.9	32.3	32.6	32.5
	50	30.7	31.5	32.0	32.5	32.7	32.8	32.5
R134a	30	19.1	20.4	21.4	22.0	22.5	22.8	22.6
	35	20.9	21.9	22.5	23.0	23.3	23.4	23.0
	38	21.7	22.5	23.1	23.5	23.6	23.6	23.1
	40	22.2	22.9	23.4	23.7	23.8	23.7	23.2
	45	23.3	23.8	24.1	24.2	24.2	23.8	23.2
	50	24.0	24.3	24.4	24.4	24.3	23.8	22.9
R404A	30	17.9	19.2	20.1	20.8	21.2	21.5	21.3
	35	19.1	20.1	20.7	21.2	21.4	21.4	21.0
	38	19.6	20.3	20.9	21.2	21.3	21.2	20.7
	40	19.7	20.4	20.8	21.1	21.1	20.9	20.3
	45	19.9	20.3	20.6	20.7	20.6	20.2	19.4
	50	19.6	19.8	19.9	19.8	19.7	19.0	18.1
R407C	30	25.0	26.9	28.3	29.3	30.0	30.8	30.9
	35	27.3	28.7	29.8	30.5	31.1	31.5	31.4
	38	28.3	29.6	30.5	31.1	31.5	31.8	31.5
	40	28.9	30.1	30.9	31.4	31.8	31.9	31.6
	45	30.2	31.0	31.6	32.0	32.1	32.1	31.5
	50	30.9	31.5	31.9	32.1	32.2	31.8	31.1
R410A	30	29.0	31.4	33.3	34.7	35.9	37.3	37.8
	35	31.2	33.1	34.7	35.8	36.7	37.7	38.0
	38	32.2	33.9	35.2	36.2	37.0	37.8	37.9
	40	32.8	34.3	35.5	36.4	37.1	37.8	37.8
	45	33.6	34.8	35.8	36.5	36.9	37.3	37.1
	50	33.8	34.7	35.5	35.9	36.3	36.4	36.0

Capacity (kW)

SI units

	Condensing temperature (°C)	ETS 6 – 32						
		Evaporation temperature [°C]						
		10	5	0	-5	-10	-20	-30
R32	30	41.52	45.18	48.13	50.50	52.41	55.09	56.60
	35	45.32	48.35	50.82	52.81	54.40	56.62	57.79
	38	47.18	49.91	52.13	53.92	55.36	57.31	58.30
	40	48.26	50.80	52.88	54.55	55.88	57.68	58.56
	45	50.42	52.56	54.31	55.71	56.81	58.24	58.84
	50	51.81	53.62	55.08	56.24	57.14	58.24	58.60
R290	30	25.64	27.51	28.91	29.92	30.64	31.35	31.35
	35	27.79	29.21	30.26	31.00	31.48	31.83	31.56
	38	28.81	30.01	30.88	31.47	31.82	31.98	31.56
	40	29.39	30.46	31.21	31.71	31.99	32.02	31.50
	45	30.50	31.27	31.78	32.07	32.17	31.90	31.16
	50	31.16	31.68	31.97	32.07	32.01	31.47	30.52
R448A	30	25.93	28.07	28.33	30.09	29.56	29.97	29.80
	35	27.78	29.47	29.52	30.94	30.30	30.39	29.98
	38	28.01	29.56	29.54	30.86	30.18	30.17	29.68
	40	28.36	29.79	29.71	30.92	30.22	30.11	29.55
	45	28.99	30.11	29.86	30.81	30.02	29.65	28.89
	50	28.99	29.92	29.57	30.37	29.52	28.98	28.08
R449A	30	25.53	26.90	27.90	28.63	29.11	29.51	29.33
	35	29.69	28.01	28.76	29.28	29.58	29.71	29.33
	38	27.58	28.47	29.08	29.50	29.70	29.68	29.18
	40	27.90	28.69	29.22	29.57	29.71	29.60	29.03
	45	28.41	28.98	29.32	29.51	29.52	29.18	28.43
	50	28.49	28.87	29.05	29.10	28.98	28.44	27.53
R452A	30	20.05	21.10	21.84	22.33	22.62	22.70	22.30
	35	20.98	21.73	22.24	22.54	22.66	22.49	21.89
	38	21.31	21.92	22.30	22.50	22.53	22.22	21.51
	40	21.45	21.97	22.27	22.40	22.38	21.98	21.20
	45	21.49	21.80	21.93	21.91	21.77	21.15	20.21
	50	21.09	21.22	21.20	21.05	20.79	19.98	18.89

Capacity (kW)

SI units

	Condensing temperature (°C)	ETS 6 – 40						
		Evaporation temperature [°C]						
		10	5	0	-10	-20	-30	-40
R22	30	32.6	35.2	37.3	40.0	41.5	42.1	42.0
	35	35.7	37.8	39.5	41.6	42.7	43.0	42.8
	38	37.3	39.1	40.6	42.4	43.3	43.5	43.1
	40	38.2	39.9	41.2	42.9	43.7	43.7	43.2
	45	40.2	41.5	42.6	43.8	44.3	44.1	43.4
	50	41.6	42.7	43.5	44.4	44.5	44.1	43.3
R134a	30	25.9	27.7	29.0	30.5	30.9	30.7	–
	35	28.3	29.7	30.6	31.6	31.7	31.2	–
	38	29.5	30.6	31.4	32.1	32.0	31.4	–
	40	30.2	31.1	31.8	32.4	32.2	31.5	–
	45	31.6	32.2	32.7	32.8	32.4	31.4	–
	50	32.5	32.9	33.1	33.0	32.3	31.1	–
R404A	30	24.3	26.0	27.3	28.7	29.2	28.9	28.1
	35	26.0	27.2	28.1	29.1	29.1	28.5	27.5
	38	26.6	27.6	28.3	28.9	28.8	28.0	26.9
	40	26.8	27.7	28.2	28.7	28.4	27.6	26.3
	45	27.0	27.6	27.9	28.0	27.4	26.3	24.9
	50	26.6	26.9	27.0	26.7	25.8	24.5	22.9
R410A	30	39.3	42.6	45.2	48.7	50.6	51.4	51.3
	35	42.4	45.0	47.0	49.8	51.2	51.6	51.2
	38	43.7	46.0	47.8	50.2	51.3	51.5	51.0
	40	44.5	46.5	48.2	50.3	51.2	51.3	50.7
	45	45.6	47.3	48.5	50.1	50.7	50.4	49.6
	50	45.9	47.2	48.1	49.2	49.4	48.9	47.8

Capacity (kW)

SI units

	Condensing temperature (°C)	ETS 6 – 40						
		Evaporation temperature [°C]						
		10	5	0	-10	-20	-30	-40
R32	30	59.48	64.74	68.96	72.36	75.09	78.93	81.09
	35	64.93	69.28	72.81	75.66	77.95	81.12	82.80
	38	67.60	71.50	74.69	77.26	79.31	82.12	83.53
	40	69.14	72.79	75.76	78.16	80.07	82.64	83.90
	45	72.24	75.31	77.81	79.82	81.39	83.45	84.31
	50	74.23	76.82	78.92	80.58	81.86	83.45	83.96
R290	30	34.79	37.34	39.23	40.61	41.58	42.55	42.55
	35	37.71	39.65	41.06	42.06	42.72	43.19	42.83
	38	39.10	40.73	41.91	42.71	43.19	43.40	42.83
	40	39.89	41.34	42.36	43.04	43.41	43.45	42.75
	45	41.40	42.44	43.13	43.52	43.65	43.29	42.29
	50	42.29	42.99	43.39	43.52	43.44	42.71	41.42
R448A	30	37.15	40.22	40.59	43.12	42.35	42.94	42.70
	35	39.81	42.23	42.29	44.33	43.41	43.54	42.95
	38	40.13	42.36	42.33	44.21	43.24	43.23	42.53
	40	40.63	42.68	42.57	44.30	43.29	43.14	42.33
	45	41.53	43.14	42.78	44.15	43.01	42.48	41.39
	50	41.53	42.87	42.37	43.51	42.29	41.52	40.23
R449A	30	36.58	38.54	39.98	41.02	41.70	42.28	42.02
	35	38.62	40.13	41.20	41.96	42.38	42.57	42.02
	38	39.51	40.79	41.67	42.26	42.55	42.53	41.81
	40	39.97	41.11	41.87	42.37	42.57	42.41	41.59
	45	40.70	41.52	42.01	42.28	42.29	41.81	40.74
	50	40.82	41.36	41.62	41.69	41.52	40.75	39.44
R452A	30	28.73	30.23	31.29	31.00	32.40	32.53	31.96
	35	30.05	31.14	31.86	32.29	32.47	32.22	31.37
	38	30.54	31.41	31.96	32.23	32.28	31.83	30.82
	40	30.74	31.48	31.91	32.10	32.07	31.49	30.38
	45	30.79	31.24	31.43	31.40	31.18	30.31	28.96
	50	30.21	30.40	30.38	30.16	29.78	28.63	27.06

Capacity (TR)

US units

	Condensing temperature (°F)	ETS 6 – 08									
		Evaporation temperature [°F]									
		-40	-35	-25	-15	-5	15	25	35	45	55
R22	75	0.452	0.452	0.45	0.446	0.439	0.414	0.394	0.367	0.385	0.28
	85	0.464	0.465	0.465	0.463	0.458	0.439	0.423	0.402	0.437	0.336
	95	0.474	0.475	0.477	0.476	0.474	0.46	0.448	0.431	0.482	0.38
	115	0.481	0.484	0.488	0.491	0.492	0.487	0.481	0.471	0.547	0.44
	125	0.478	0.481	0.487	0.491	0.493	0.492	0.488	0.481	0.569	0.458
	135	0.472	0.475	0.482	0.487	0.491	0.493	0.491	0.487	0.584	0.469
R134a	75	0.325	0.327	0.329	0.33	0.329	0.317	0.305	0.287	0.262	0.225
	85	0.331	0.334	0.338	0.341	0.341	0.335	0.327	0.314	0.296	0.269
	95	0.336	0.339	0.344	0.348	0.351	0.349	0.344	0.336	0.323	0.303
	115	0.333	0.338	0.345	0.352	0.358	0.365	0.365	0.362	0.357	0.347
	125	0.326	0.331	0.34	0.348	0.355	0.365	0.367	0.367	0.365	0.359
	135	0.316	0.321	0.331	0.34	0.349	0.362	0.366	0.368	0.368	0.365
R404A	75	0.317	0.319	0.322	0.324	0.322	0.311	0.299	0.281	0.257	0.221
	85	0.312	0.315	0.32	0.323	0.324	0.319	0.311	0.299	0.281	0.255
	95	0.304	0.307	0.314	0.319	0.322	0.321	0.317	0.309	0.297	0.279
	115	0.27	0.275	0.284	0.292	0.298	0.307	0.308	0.307	0.302	0.294
	125	0.244	0.249	0.259	0.268	0.276	0.288	0.292	0.293	0.292	0.287
	135	0.211	0.217	0.228	0.238	0.248	0.263	0.268	0.272	0.273	0.272
R407C	75	0.459	0.461	0.464	0.464	0.463	0.449	0.435	0.416	0.389	0.351
	85	0.463	0.466	0.47	0.473	0.473	0.465	0.456	0.441	0.421	0.392
	95	0.465	0.468	0.474	0.478	0.481	0.478	0.472	0.461	0.446	0.424
	115	0.452	0.456	0.465	0.472	0.478	0.484	0.483	0.479	0.472	0.46
	125	0.436	0.442	0.451	0.46	0.467	0.477	0.479	0.477	0.473	0.465
	135	0.416	0.422	0.433	0.443	0.451	0.464	0.468	0.469	0.468	0.463
R410A	75	0.561	0.561	0.559	0.553	0.544	0.511	0.486	0.459	0.406	0.343
	85	0.566	0.567	0.567	0.564	0.558	0.534	0.514	0.493	0.452	0.404
	95	0.567	0.568	0.57	0.57	0.567	0.549	0.534	0.518	0.486	0.449
	115	0.544	0.548	0.553	0.556	0.558	0.552	0.544	0.536	0.516	0.494
	125	0.519	0.523	0.53	0.535	0.538	0.537	0.533	0.527	0.512	0.496
	135	0.484	0.489	0.497	0.504	0.509	0.512	0.51	0.508	0.497	0.485

Capacity (TR)

US units

	Condensing temperature (°F)	ETS 6 – 08									
		Evaporation temperature [°F]									
		-40	-35	-25	-15	-5	15	25	35	45	55
R32	75	0.835	0.833	0.824	0.811	0.793	0.737	0.696	0.643	0.575	0.484
	85	0.859	0.857	0.851	0.841	0.827	0.825	0.746	0.704	0.649	0.578
	95	0.875	0.874	0.871	0.864	0.853	0.815	0.788	0.752	0.708	0.651
	115	0.883	0.885	0.885	0.883	0.877	0.854	0.836	0.839	0.782	0.743
	125	0.872	0.874	0.876	0.876	0.873	0.856	0.842	0.822	0.797	0.766
	135	0.852	0.855	0.859	0.860	0.859	0.848	0.836	0.821	0.800	0.774
R290	75	0.459	0.460	0.462	0.461	0.457	0.437	0.418	0.392	0.356	0.303
	85	0.464	0.466	0.470	0.472	0.471	0.458	0.448	0.425	0.398	0.361
	95	0.464	0.467	0.473	0.477	0.478	0.472	0.464	0.450	0.430	0.403
	115	0.450	0.455	0.464	0.472	0.478	0.484	0.482	0.477	0.468	0.454
	125	0.434	0.440	0.451	0.461	0.469	0.479	0.481	0.479	0.474	0.465
	135	0.414	0.421	0.433	0.445	0.454	0.469	0.473	0.475	0.473	0.468
R448A	75	0.433	0.434	0.435	0.434	0.432	0.416	0.412	0.378	0.349	0.289
	85	0.432	0.436	0.445	0.449	0.450	0.445	0.447	0.425	0.408	0.370
	95	0.411	0.422	0.444	0.453	0.456	0.457	0.460	0.443	0.432	0.396
	115	0.412	0.418	0.430	0.439	0.445	0.453	0.460	0.450	0.445	0.425
	125	0.396	0.403	0.418	0.427	0.435	0.445	0.454	0.446	0.444	0.428
	135	0.347	0.353	0.365	0.376	0.386	0.401	0.406	0.409	0.409	0.406
R449A	75	0.433	0.434	0.435	0.434	0.432	0.416	0.412	0.378	0.349	0.289
	85	0.439	0.440	0.441	0.442	0.443	0.437	0.428	0.414	0.395	0.367
	95	0.439	0.440	0.441	0.443	0.446	0.444	0.438	0.428	0.414	0.395
	115	0.418	0.421	0.426	0.432	0.438	0.444	0.443	0.436	0.428	0.422
	125	0.405	0.407	0.412	0.419	0.427	0.436	0.437	0.436	0.432	0.424
	135	0.357	0.363	0.374	0.385	0.395	0.411	0.422	0.420	0.422	0.414
R452A	75	0.329	0.332	0.336	0.339	0.340	0.332	0.323	0.308	0.289	0.257
	85	0.324	0.328	0.333	0.338	0.341	0.339	0.334	0.324	0.311	0.289
	95	0.316	0.320	0.327	0.333	0.337	0.340	0.338	0.329	0.323	0.306
	115	0.282	0.288	0.297	0.307	0.314	0.325	0.328	0.328	0.325	0.318
	125	0.254	0.261	0.271	0.282	0.290	0.306	0.310	0.313	0.314	0.311
	135	0.225	0.231	0.242	0.255	0.264	0.283	0.289	0.294	0.296	0.296

Capacity (TR)

US units

	Condensing temperature (°F)	ETS 6 – 10									
		Evaporation temperature [°F]									
		-40	-35	-25	-15	-5	15	25	35	45	55
R22	75	0.76	0.76	0.76	0.75	0.74	0.70	0.67	0.62	0.65	0.47
	85	0.78	0.79	0.79	0.78	0.77	0.74	0.72	0.68	0.74	0.57
	95	0.80	0.80	0.81	0.81	0.80	0.78	0.76	0.73	0.82	0.64
	115	0.81	0.82	0.82	0.83	0.83	0.82	0.81	0.80	0.92	0.74
	125	0.81	0.81	0.82	0.83	0.83	0.83	0.83	0.81	0.96	0.77
	135	0.80	0.80	0.81	0.82	0.83	0.83	0.83	0.82	0.99	0.79
R134a	75	0.55	0.55	0.56	0.56	0.56	0.54	0.52	0.49	0.44	0.38
	85	0.56	0.56	0.57	0.58	0.58	0.57	0.55	0.53	0.50	0.45
	95	0.57	0.57	0.58	0.59	0.59	0.59	0.58	0.57	0.55	0.51
	115	0.56	0.57	0.58	0.60	0.61	0.62	0.62	0.61	0.60	0.59
	125	0.55	0.56	0.57	0.59	0.60	0.62	0.62	0.62	0.62	0.61
	135	0.53	0.54	0.56	0.58	0.59	0.61	0.62	0.62	0.62	0.62
R404A	75	0.54	0.54	0.54	0.55	0.55	0.53	0.51	0.48	0.43	0.37
	85	0.53	0.53	0.54	0.55	0.55	0.54	0.53	0.50	0.48	0.43
	95	0.51	0.52	0.53	0.54	0.54	0.54	0.54	0.52	0.50	0.47
	115	0.46	0.46	0.48	0.49	0.50	0.52	0.52	0.52	0.51	0.50
	125	0.41	0.42	0.44	0.45	0.47	0.49	0.49	0.50	0.49	0.49
	135	0.36	0.37	0.39	0.40	0.42	0.44	0.45	0.46	0.46	0.46
R407C	75	0.78	0.78	0.78	0.78	0.78	0.76	0.74	0.70	0.66	0.59
	85	0.78	0.79	0.79	0.80	0.80	0.79	0.77	0.75	0.71	0.66
	95	0.79	0.79	0.80	0.81	0.81	0.81	0.80	0.78	0.75	0.72
	115	0.76	0.77	0.79	0.80	0.81	0.82	0.82	0.81	0.80	0.78
	125	0.74	0.75	0.76	0.78	0.79	0.81	0.81	0.81	0.80	0.79
	135	0.70	0.71	0.73	0.75	0.76	0.78	0.79	0.79	0.79	0.78
R410A	75	0.95	0.95	0.94	0.94	0.92	0.86	0.82	0.78	0.69	0.58
	85	0.96	0.96	0.96	0.95	0.94	0.90	0.87	0.83	0.76	0.68
	95	0.96	0.96	0.96	0.96	0.96	0.93	0.90	0.88	0.82	0.76
	115	0.92	0.93	0.93	0.94	0.94	0.93	0.92	0.91	0.87	0.84
	125	0.88	0.88	0.89	0.90	0.91	0.91	0.90	0.89	0.87	0.84
	135	0.82	0.83	0.84	0.85	0.86	0.87	0.86	0.86	0.84	0.82

Capacity (TR)

US units

	Condensing temperature (°F)	ETS 6 – 10									
		Evaporation temperature [°F]									
		-40	-35	-25	-15	-5	15	25	35	45	55
R32	75	1.411	1.406	1.392	1.370	1.340	1.244	1.176	1.086	0.972	0.817
	85	1.451	1.448	1.438	1.421	1.397	1.394	1.260	1.189	1.095	0.976
	95	1.477	1.476	1.471	1.459	1.440	1.377	1.331	1.271	1.196	1.100
	115	1.492	1.494	1.495	1.491	1.482	1.443	1.413	1.417	1.321	1.256
	125	1.473	1.476	1.480	1.480	1.475	1.446	1.422	1.389	1.347	1.293
	135	1.439	1.444	1.450	1.453	1.451	1.432	1.413	1.386	1.352	1.308
R290	75	0.775	0.777	0.780	0.779	0.772	0.737	0.706	0.662	0.601	0.512
	85	0.783	0.788	0.794	0.797	0.795	0.773	0.757	0.718	0.673	0.609
	95	0.783	0.789	0.799	0.806	0.808	0.798	0.784	0.760	0.727	0.680
	115	0.760	0.768	0.784	0.798	0.808	0.817	0.814	0.806	0.790	0.766
	125	0.734	0.744	0.762	0.778	0.792	0.809	0.812	0.809	0.801	0.785
	135	0.700	0.711	0.732	0.751	0.768	0.793	0.799	0.802	0.800	0.791
R448A	75	0.731	0.733	0.736	0.734	0.729	0.703	0.696	0.639	0.590	0.488
	85	0.730	0.737	0.752	0.758	0.761	0.752	0.754	0.717	0.689	0.626
	95	0.695	0.713	0.750	0.765	0.771	0.771	0.778	0.749	0.729	0.669
	115	0.695	0.706	0.727	0.741	0.752	0.765	0.777	0.760	0.752	0.718
	125	0.669	0.681	0.706	0.722	0.734	0.752	0.767	0.754	0.749	0.722
	135	0.587	0.597	0.617	0.635	0.651	0.677	0.685	0.690	0.691	0.686
449A	75	0.731	0.733	0.736	0.734	0.729	0.703	0.696	0.639	0.590	0.488
	85	0.742	0.743	0.744	0.747	0.749	0.738	0.723	0.700	0.668	0.621
	95	0.742	0.742	0.744	0.749	0.754	0.750	0.741	0.724	0.700	0.668
	115	0.707	0.711	0.719	0.729	0.740	0.749	0.748	0.737	0.722	0.712
	125	0.683	0.688	0.696	0.708	0.721	0.736	0.739	0.737	0.730	0.717
	135	0.603	0.613	0.632	0.650	0.667	0.694	0.713	0.709	0.712	0.700
R152A	75	0.556	0.561	0.568	0.573	0.574	0.560	0.546	0.520	0.488	0.434
	85	0.547	0.554	0.563	0.572	0.576	0.573	0.565	0.548	0.526	0.488
	95	0.533	0.541	0.552	0.563	0.570	0.575	0.571	0.555	0.545	0.517
	115	0.477	0.486	0.501	0.518	0.530	0.550	0.553	0.553	0.549	0.538
	125	0.429	0.440	0.457	0.476	0.490	0.517	0.524	0.529	0.530	0.525
	135	0.379	0.391	0.409	0.430	0.446	0.478	0.488	0.496	0.500	0.500

Capacity (TR)

US units

	Condensing temperature (°F)	ETS 6 – 14									
		Evaporation temperature [°F]									
		-40	-35	-25	-15	-5	15	25	35	45	55
R22	75	1.71	1.71	1.70	1.69	1.66	1.57	1.49	1.39	1.46	1.06
	85	1.76	1.76	1.76	1.75	1.73	1.66	1.60	1.52	1.66	1.27
	95	1.79	1.80	1.80	1.80	1.79	1.74	1.70	1.63	1.82	1.44
	115	1.82	1.83	1.85	1.86	1.86	1.84	1.82	1.78	2.07	1.66
	125	1.81	1.82	1.84	1.86	1.87	1.86	1.85	1.82	2.15	1.73
	135	1.78	1.80	1.82	1.84	1.86	1.87	1.86	1.84	2.21	1.77
R134a	75	1.23	1.24	1.25	1.25	1.24	1.20	1.15	1.09	0.99	0.85
	85	1.25	1.26	1.28	1.29	1.29	1.27	1.24	1.19	1.12	1.02
	95	1.27	1.28	1.30	1.32	1.33	1.32	1.30	1.27	1.22	1.15
	115	1.26	1.28	1.31	1.33	1.35	1.38	1.38	1.37	1.35	1.31
	125	1.23	1.25	1.29	1.32	1.34	1.38	1.39	1.39	1.38	1.36
	135	1.19	1.21	1.25	1.29	1.32	1.37	1.38	1.39	1.39	1.38
R404A	75	1.20	1.21	1.22	1.22	1.22	1.18	1.13	1.06	0.97	0.83
	85	1.18	1.19	1.21	1.22	1.23	1.21	1.18	1.13	1.06	0.97
	95	1.15	1.16	1.19	1.21	1.22	1.22	1.20	1.17	1.12	1.05
	115	1.02	1.04	1.07	1.10	1.13	1.16	1.17	1.16	1.14	1.11
	125	0.92	0.94	0.98	1.02	1.05	1.09	1.10	1.11	1.10	1.09
	135	0.80	0.82	0.86	0.90	0.94	1.00	1.02	1.03	1.03	1.03
R407C	75	1.74	1.74	1.75	1.76	1.75	1.70	1.65	1.57	1.47	1.33
	85	1.75	1.76	1.78	1.79	1.79	1.76	1.72	1.67	1.59	1.48
	95	1.76	1.77	1.79	1.81	1.82	1.81	1.78	1.74	1.69	1.60
	115	1.71	1.73	1.76	1.79	1.81	1.83	1.83	1.81	1.79	1.74
	125	1.65	1.67	1.71	1.74	1.77	1.80	1.81	1.81	1.79	1.76
	135	1.57	1.60	1.64	1.68	1.71	1.76	1.77	1.78	1.77	1.75
R410A	75	2.12	2.12	2.11	2.09	2.06	1.93	1.84	1.74	1.54	1.30
	85	2.14	2.15	2.15	2.13	2.11	2.02	1.94	1.87	1.71	1.53
	95	2.14	2.15	2.16	2.16	2.14	2.08	2.02	1.96	1.84	1.70
	115	2.06	2.07	2.09	2.11	2.11	2.09	2.06	2.03	1.95	1.87
	125	1.96	1.98	2.00	2.02	2.04	2.03	2.01	2.00	1.94	1.88
	135	1.83	1.85	1.88	1.91	1.92	1.94	1.93	1.92	1.88	1.83

Capacity (TR)

US units

	Condensing temperature (°F)	ETS 6 – 14									
		Evaporation temperature [°F]									
		-40	-35	-25	-15	-5	15	25	35	45	55
R32	75	3.161	3.150	3.119	3.070	3.002	2.788	2.634	2.433	2.177	1.830
	85	3.249	3.243	3.221	3.184	3.130	3.122	2.823	2.664	2.454	2.186
	95	3.310	3.307	3.294	3.268	3.226	3.085	2.982	2.847	2.679	2.464
	115	3.342	3.347	3.349	3.340	3.320	3.233	3.164	3.175	2.959	2.813
	125	3.300	3.307	3.316	3.315	3.303	3.239	3.185	3.111	3.017	2.897
	135	3.224	3.235	3.249	3.255	3.251	3.207	3.165	3.105	3.028	2.929
R290	75	1.735	1.741	1.748	1.745	1.730	1.652	1.582	1.482	1.345	1.148
	85	1.754	1.764	1.779	1.785	1.781	1.732	1.697	1.609	1.508	1.364
	95	1.754	1.768	1.790	1.804	1.810	1.788	1.755	1.703	1.629	1.523
	115	1.702	1.721	1.756	1.786	1.809	1.830	1.824	1.805	1.771	1.716
	125	1.643	1.666	1.707	1.743	1.774	1.813	1.819	1.813	1.794	1.759
	135	1.568	1.593	1.639	1.682	1.719	1.775	1.791	1.797	1.791	1.772
R448A	75	1.637	1.641	1.648	1.643	1.633	1.574	1.559	1.432	1.322	1.093
	85	1.635	1.652	1.685	1.699	1.704	1.685	1.690	1.606	1.543	1.401
	95	1.556	1.598	1.680	1.714	1.727	1.728	1.742	1.678	1.634	1.499
	115	1.558	1.582	1.628	1.660	1.684	1.713	1.741	1.703	1.684	1.609
	125	1.499	1.527	1.581	1.617	1.645	1.685	1.717	1.689	1.679	1.618
	135	1.315	1.337	1.381	1.421	1.459	1.516	1.535	1.546	1.548	1.537
R449A	75	1.637	1.641	1.648	1.643	1.633	1.574	1.559	1.432	1.322	1.093
	85	1.662	1.664	1.667	1.672	1.678	1.652	1.619	1.568	1.496	1.391
	95	1.661	1.663	1.667	1.677	1.689	1.681	1.659	1.621	1.567	1.496
	115	1.583	1.592	1.611	1.634	1.657	1.679	1.676	1.651	1.618	1.595
	125	1.531	1.541	1.560	1.586	1.614	1.649	1.654	1.651	1.636	1.605
	135	1.350	1.372	1.416	1.456	1.493	1.555	1.598	1.588	1.596	1.568
R452A	75	1.246	1.257	1.273	1.284	1.286	1.255	1.223	1.165	1.094	0.973
	85	1.226	1.241	1.261	1.280	1.290	1.284	1.266	1.227	1.179	1.094
	95	1.194	1.211	1.236	1.261	1.277	1.288	1.279	1.244	1.221	1.159
	115	1.068	1.089	1.123	1.160	1.187	1.231	1.240	1.240	1.230	1.205
	125	0.962	0.986	1.024	1.066	1.098	1.158	1.174	1.185	1.186	1.176
	135	0.850	0.876	0.917	0.963	0.999	1.070	1.092	1.111	1.120	1.121

Capacity (TR)

US units

	Condensing temperature (°F)	ETS 6 – 18									
		Evaporation temperature [°F]									
		-40	-35	-25	-15	-5	15	25	35	45	55
R22	75	3.05	3.05	3.04	3.01	2.97	2.80	2.66	2.48	2.60	1.89
	85	3.13	3.14	3.14	3.12	3.09	2.96	2.86	2.71	2.96	2.27
	95	3.20	3.21	3.22	3.22	3.20	3.11	3.03	2.92	3.26	2.57
	115	3.25	3.27	3.30	3.31	3.32	3.29	3.25	3.18	3.70	2.97
	125	3.23	3.25	3.29	3.31	3.33	3.33	3.30	3.25	3.84	3.09
	135	3.19	3.21	3.25	3.29	3.31	3.33	3.32	3.29	3.95	3.17
R134a	75	2.19	2.21	2.22	2.23	2.22	2.14	2.06	1.94	1.77	1.52
	85	2.24	2.26	2.28	2.30	2.30	2.26	2.21	2.12	2.00	1.82
	95	2.27	2.29	2.33	2.35	2.37	2.36	2.33	2.27	2.18	2.05
	115	2.25	2.28	2.33	2.38	2.42	2.46	2.46	2.45	2.41	2.34
	125	2.20	2.24	2.30	2.35	2.40	2.47	2.48	2.48	2.46	2.42
	135	2.13	2.17	2.24	2.30	2.35	2.44	2.47	2.49	2.49	2.47
R404A	75	2.14	2.16	2.18	2.19	2.18	2.10	2.02	1.90	1.73	1.49
	85	2.11	2.13	2.16	2.18	2.19	2.15	2.10	2.02	1.90	1.73
	95	2.05	2.08	2.12	2.15	2.17	2.17	2.14	2.09	2.00	1.88
	115	1.82	1.86	1.92	1.97	2.02	2.07	2.08	2.07	2.04	1.99
	125	1.65	1.68	1.75	1.81	1.87	1.95	1.97	1.98	1.97	1.94
	135	1.42	1.46	1.54	1.61	1.67	1.78	1.81	1.84	1.85	1.84
R407C	75	3.10	3.11	3.13	3.14	3.12	3.03	2.94	2.81	2.63	2.37
	85	3.13	3.15	3.18	3.20	3.20	3.14	3.08	2.98	2.84	2.65
	95	3.14	3.16	3.20	3.23	3.25	3.23	3.19	3.11	3.01	2.86
	115	3.05	3.08	3.14	3.19	3.23	3.27	3.27	3.24	3.19	3.11
	125	2.95	2.98	3.05	3.11	3.16	3.22	3.23	3.23	3.20	3.14
	135	2.81	2.85	2.92	2.99	3.05	3.14	3.16	3.17	3.16	3.13
R410A	75	3.79	3.79	3.78	3.74	3.68	3.46	3.28	3.10	2.74	2.32
	85	3.82	3.83	3.83	3.81	3.77	3.61	3.47	3.33	3.05	2.73
	95	3.83	3.84	3.85	3.85	3.83	3.71	3.61	3.50	3.28	3.04
	115	3.68	3.70	3.74	3.76	3.77	3.73	3.68	3.62	3.49	3.34
	125	3.50	3.53	3.58	3.61	3.63	3.63	3.60	3.56	3.46	3.35
	135	3.27	3.30	3.36	3.40	3.44	3.46	3.45	3.43	3.36	3.27

Capacity (TR)

US units

	Condensing temperature (°F)	ETS 6 – 18									
		Evaporation temperature [°F]									
		-40	-35	-25	-15	-5	15	25	35	45	55
R32	75	5.645	5.626	5.569	5.482	5.361	4.978	4.703	4.344	3.887	3.267
	85	5.802	5.791	5.752	5.686	5.590	5.576	5.041	4.757	4.382	3.903
	95	5.910	5.906	5.883	5.835	5.761	5.510	5.324	5.083	4.784	4.400
	115	5.969	5.977	5.981	5.965	5.928	5.773	5.650	5.669	5.283	5.023
	125	5.892	5.906	5.921	5.920	5.899	5.784	5.687	5.555	5.387	5.173
	135	5.758	5.777	5.801	5.812	5.805	5.726	5.651	5.545	5.408	5.231
R290	75	3.098	3.110	3.122	3.116	3.089	2.950	2.825	2.647	2.403	2.049
	85	3.133	3.151	3.177	3.188	3.180	3.094	3.030	2.873	2.692	2.436
	95	3.132	3.157	3.196	3.222	3.233	3.192	3.134	3.041	2.909	2.720
	115	3.039	3.074	3.137	3.190	3.231	3.268	3.257	3.223	3.162	3.064
	125	2.934	2.975	3.048	3.113	3.167	3.237	3.247	3.237	3.203	3.140
	135	2.799	2.844	2.927	3.004	3.070	3.170	3.198	3.209	3.199	3.164
R448A	75	2.924	2.930	2.943	2.934	2.917	2.810	2.784	2.557	2.361	1.951
	85	2.919	2.949	3.009	3.034	3.043	3.009	3.017	2.868	2.755	2.502
	95	2.778	2.853	3.000	3.061	3.084	3.085	3.110	2.996	2.918	2.677
	115	2.782	2.824	2.908	2.964	3.007	3.059	3.108	3.041	3.008	2.873
	125	2.677	2.726	2.822	2.888	2.938	3.008	3.067	3.016	2.997	2.890
	135	2.348	2.388	2.467	2.538	2.605	2.707	2.742	2.760	2.764	2.744
R449A	75	2.924	2.930	2.943	2.934	2.917	2.810	2.784	2.557	2.361	1.951
	85	2.968	2.971	2.977	2.986	2.996	2.950	2.892	2.799	2.671	2.483
	95	2.966	2.970	2.977	2.994	3.016	3.001	2.963	2.895	2.798	2.672
	115	2.826	2.844	2.877	2.917	2.959	2.998	2.993	2.949	2.889	2.849
	125	2.734	2.751	2.785	2.832	2.883	2.945	2.954	2.948	2.921	2.866
	135	2.411	2.451	2.529	2.600	2.666	2.776	2.853	2.836	2.850	2.800
R452A	75	2.225	2.245	2.272	2.292	2.296	2.241	2.184	2.078	1.953	1.737
	85	2.189	2.215	2.253	2.287	2.304	2.293	2.260	2.191	2.105	1.954
	95	2.132	2.162	2.207	2.252	2.280	2.300	2.284	2.221	2.180	2.070
	115	1.906	1.945	2.006	2.071	2.119	2.198	2.213	2.214	2.197	2.152
	125	1.717	1.760	1.828	1.904	1.961	2.067	2.096	2.116	2.118	2.100
	135	1.518	1.563	1.637	1.720	1.784	1.911	1.950	1.984	2.000	2.001

Capacity (TR)

US units

	Condensing temperature (°F)	ETS 6 – 25									
		Evaporation temperature [°F]									
		-40	-35	-25	-15	-5	15	25	35	45	55
R22	75	5.80	5.80	5.78	5.73	5.64	5.31	5.05	4.70	4.94	3.60
	85	5.96	5.96	5.96	5.94	5.88	5.63	5.43	5.16	5.62	4.31
	95	6.08	6.10	6.12	6.11	6.08	5.91	5.75	5.54	6.19	4.88
	115	6.18	6.21	6.26	6.30	6.31	6.25	6.17	6.05	7.02	5.64
	125	6.14	6.18	6.25	6.30	6.33	6.32	6.27	6.18	7.30	5.87
	135	6.05	6.10	6.18	6.25	6.30	6.33	6.31	6.25	7.50	6.02
R134a	75	4.17	4.19	4.23	4.24	4.22	4.07	3.92	3.69	3.37	2.89
	85	4.25	4.29	4.34	4.37	4.38	4.30	4.20	4.03	3.79	3.45
	95	4.31	4.35	4.42	4.47	4.50	4.48	4.42	4.31	4.14	3.89
	115	4.28	4.33	4.43	4.52	4.60	4.68	4.68	4.65	4.58	4.45
	125	4.19	4.25	4.36	4.47	4.56	4.69	4.72	4.72	4.68	4.61
	135	4.05	4.12	4.25	4.37	4.47	4.64	4.70	4.73	4.72	4.69
R404A	75	4.07	4.10	4.14	4.15	4.14	3.99	3.84	3.61	3.30	2.83
	85	4.01	4.05	4.11	4.15	4.16	4.09	3.99	3.83	3.61	3.28
	95	3.90	3.95	4.03	4.09	4.13	4.13	4.07	3.97	3.81	3.58
	115	3.47	3.53	3.64	3.75	3.83	3.94	3.95	3.94	3.88	3.78
	125	3.13	3.20	3.33	3.44	3.55	3.70	3.75	3.76	3.75	3.69
	135	2.71	2.78	2.93	3.06	3.18	3.38	3.45	3.49	3.51	3.50
R407C	75	5.89	5.91	5.95	5.96	5.94	5.76	5.59	5.33	4.99	4.50
	85	5.95	5.98	6.04	6.07	6.08	5.97	5.85	5.66	5.40	5.03
	95	5.96	6.01	6.08	6.14	6.17	6.13	6.05	5.92	5.72	5.44
	115	5.80	5.86	5.97	6.06	6.14	6.21	6.20	6.15	6.06	5.91
	125	5.60	5.67	5.79	5.91	6.00	6.12	6.14	6.13	6.07	5.97
	135	5.34	5.41	5.55	5.68	5.79	5.96	6.01	6.02	6.01	5.95
R410A	75	7.20	7.20	7.17	7.10	6.99	6.56	6.24	5.89	5.21	4.40
	85	7.27	7.28	7.28	7.24	7.17	6.85	6.59	6.33	5.80	5.19
	95	7.27	7.30	7.32	7.32	7.27	7.05	6.86	6.66	6.24	5.77
	115	6.99	7.03	7.10	7.14	7.16	7.09	6.99	6.88	6.63	6.34
	125	6.66	6.71	6.80	6.86	6.91	6.90	6.84	6.77	6.58	6.36
	135	6.21	6.27	6.38	6.47	6.53	6.57	6.55	6.52	6.38	6.22

Capacity (TR)

US units

	Condensing temperature (°F)	ETS 6 – 25									
		Evaporation temperature [°F]									
		-40	-35	-25	-15	-5	15	25	35	45	55
R32	75	10.758	10.722	10.614	10.447	10.217	9.487	8.963	8.279	7.409	6.227
	85	11.059	11.037	10.963	10.836	10.653	10.627	9.607	9.067	8.351	7.439
	95	11.264	11.256	11.212	11.121	10.981	10.501	10.147	9.688	9.118	8.386
	115	11.375	11.391	11.398	11.369	11.298	11.003	10.769	10.805	10.069	9.574
	125	11.230	11.256	11.285	11.280	11.242	11.024	10.839	10.586	10.267	9.859
	135	10.974	11.010	11.057	11.077	11.064	10.914	10.770	10.568	10.307	9.969
R290	75	5.89	5.91	5.93	5.92	5.87	5.60	5.37	5.03	4.56	3.89
	85	5.95	5.99	6.04	6.06	6.04	5.88	5.76	5.46	5.12	4.63
	95	5.95	6.00	6.07	6.12	6.14	6.07	5.95	5.78	5.53	5.17
	115	5.77	5.84	5.96	6.06	6.14	6.21	6.19	6.12	6.01	5.82
	125	5.58	5.65	5.79	5.92	6.02	6.15	6.17	6.15	6.09	5.97
	135	5.32	5.40	5.56	5.71	5.83	6.02	6.08	6.10	6.08	6.01
R448A	75	5.572	5.584	5.608	5.592	5.559	5.356	5.306	4.873	4.500	3.719
	85	5.563	5.621	5.734	5.782	5.800	5.734	5.751	5.467	5.251	4.769
	95	5.295	5.438	5.717	5.834	5.878	5.880	5.928	5.711	5.561	5.102
	115	5.302	5.383	5.542	5.649	5.731	5.830	5.924	5.796	5.732	5.476
	125	5.102	5.195	5.379	5.504	5.599	5.733	5.845	5.747	5.713	5.508
	135	4.475	4.551	4.701	4.838	4.965	5.160	5.225	5.261	5.269	5.229
R449A	75	5.572	5.584	5.608	5.592	5.559	5.356	5.306	4.873	4.500	3.719
	85	5.656	5.662	5.674	5.691	5.710	5.623	5.511	5.335	5.091	4.732
	95	5.654	5.660	5.674	5.707	5.748	5.720	5.646	5.518	5.333	5.092
	115	5.387	5.419	5.484	5.560	5.640	5.714	5.705	5.620	5.505	5.430
	125	5.210	5.243	5.309	5.398	5.494	5.612	5.630	5.619	5.568	5.463
	135	4.595	4.671	4.820	4.956	5.082	5.292	5.438	5.406	5.432	5.337
R452A	75	4.241	4.279	4.331	4.368	4.375	4.272	4.163	3.963	3.723	3.311
	85	4.173	4.222	4.293	4.358	4.391	4.370	4.307	4.177	4.011	3.724
	95	4.063	4.121	4.207	4.292	4.345	4.384	4.354	4.233	4.155	3.945
	115	3.633	3.707	3.823	3.948	4.038	4.190	4.219	4.219	4.187	4.101
	125	3.273	3.355	3.484	3.628	3.737	3.940	3.995	4.033	4.037	4.002
	135	2.892	2.980	3.120	3.278	3.400	3.642	3.717	3.782	3.812	3.815

Capacity (TR)

US units

	Condensing temperature (°F)	ETS 6 – 32									
		Evaporation temperature [°F]									
		-40	-35	-25	-15	-5	15	25	35	45	55
R22	75	8.55	8.55	8.51	8.44	8.31	7.83	7.45	6.93	7.28	5.30
	85	8.78	8.79	8.79	8.75	8.66	8.30	8.01	7.60	8.28	6.35
	95	8.96	8.99	9.02	9.01	8.96	8.70	8.48	8.16	9.12	7.19
	115	9.11	9.15	9.23	9.28	9.30	9.21	9.09	8.91	10.30	8.31
	125	9.05	9.11	9.21	9.28	9.33	9.31	9.24	9.11	10.70	8.65
	135	8.92	8.99	9.11	9.21	9.28	9.33	9.29	9.21	11.00	8.87
R134a	75	6.14	6.18	6.23	6.24	6.22	6.00	5.77	5.44	4.96	4.25
	85	6.27	6.32	6.39	6.44	6.45	6.34	6.18	5.94	5.59	5.08
	95	6.35	6.41	6.51	6.59	6.64	6.61	6.52	6.35	6.10	5.73
	115	6.31	6.39	6.54	6.67	6.77	6.90	6.90	6.85	6.75	6.56
	125	6.17	6.26	6.43	6.58	6.72	6.91	6.95	6.95	6.90	6.79
	135	5.97	6.07	6.26	6.44	6.59	6.84	6.92	6.96	6.96	6.91
R404A	75	6.00	6.04	6.10	6.12	6.10	5.88	5.66	5.32	4.86	4.17
	85	5.91	5.96	6.05	6.11	6.13	6.03	5.88	5.65	5.32	4.83
	95	5.75	5.82	5.93	6.03	6.09	6.08	6.00	5.85	5.61	5.27
	115	5.11	5.20	5.37	5.52	5.64	5.81	5.83	5.80	5.72	5.57
	125	4.61	4.71	4.90	5.08	5.23	5.46	5.52	5.54	5.52	5.44
	135	3.99	4.10	4.31	4.51	4.68	4.98	5.08	5.15	5.17	5.15
R407C	75	8.68	8.72	8.77	8.78	8.75	8.49	8.23	7.86	7.36	6.64
	85	8.76	8.81	8.90	8.95	8.95	8.80	8.62	8.34	7.96	7.41
	95	8.79	8.86	8.97	9.05	9.09	9.04	8.92	8.72	8.43	8.02
	115	8.55	8.64	8.80	8.94	9.05	9.16	9.14	9.07	8.93	8.71
	125	8.25	8.35	8.54	8.70	8.84	9.02	9.05	9.03	8.95	8.80
	135	7.87	7.98	8.19	8.38	8.54	8.78	8.85	8.88	8.85	8.76
R410A	75	10.61	10.61	10.57	10.47	10.30	9.67	9.19	8.69	7.68	6.48
	85	10.71	10.73	10.73	10.67	10.56	10.09	9.72	9.33	8.54	7.65
	95	10.72	10.75	10.79	10.78	10.72	10.39	10.10	9.81	9.19	8.50
	115	10.29	10.36	10.46	10.53	10.55	10.44	10.30	10.14	9.77	9.35
	125	9.81	9.89	10.02	10.12	10.18	10.16	10.07	9.98	9.69	9.38
	135	9.16	9.24	9.40	9.53	9.62	9.69	9.65	9.60	9.40	9.17

Capacity (TR)

US units

	Condensing temperature (°F)	ETS 6 – 32									
		Evaporation temperature [°F]									
		-40	-35	-25	-15	-5	15	25	35	45	55
R32	75	15.805	15.752	15.594	15.348	15.009	13.938	13.169	12.163	10.884	9.149
	85	16.247	16.215	16.106	15.919	15.651	15.612	14.114	13.321	12.269	10.929
	95	16.548	16.537	16.472	16.339	16.132	15.427	14.908	14.233	13.396	12.321
	115	16.712	16.735	16.746	16.702	16.599	16.165	15.821	15.874	14.793	14.066
	125	16.498	16.536	16.580	16.575	16.516	16.196	15.923	15.553	15.084	14.484
	135	16.122	16.175	16.244	16.274	16.254	16.034	15.823	15.525	15.142	14.646
R290	75	8.67	8.71	8.74	8.72	8.65	8.26	7.91	7.41	6.73	5.74
	85	8.77	8.82	8.89	8.93	8.91	8.66	8.48	8.05	7.54	6.82
	95	8.77	8.84	8.95	9.02	9.05	8.94	8.78	8.51	8.14	7.62
	115	8.51	8.61	8.78	8.93	9.05	9.15	9.12	9.03	8.85	8.58
	125	8.22	8.33	8.53	8.72	8.87	9.06	9.09	9.06	8.97	8.79
	135	7.84	7.96	8.20	8.41	8.60	8.88	8.95	8.98	8.96	8.86
R448A	75	8.186	8.204	8.239	8.215	8.167	7.868	7.795	7.159	6.611	5.463
	85	8.173	8.258	8.424	8.494	8.520	8.424	8.448	8.032	7.715	7.007
	95	7.780	7.989	8.399	8.571	8.635	8.638	8.709	8.390	8.170	7.495
	115	7.789	7.908	8.142	8.300	8.419	8.564	8.703	8.516	8.422	8.045
	125	7.495	7.633	7.903	8.086	8.226	8.423	8.586	8.444	8.393	8.091
	135	6.574	6.686	6.906	7.107	7.294	7.851	7.676	7.729	7.740	7.683
R449A	75	8.186	8.204	8.239	8.215	8.167	7.868	7.795	7.159	6.611	5.463
	85	8.310	8.319	8.336	8.361	8.389	8.261	8.097	7.838	7.479	6.953
	95	8.306	8.316	8.335	8.384	8.444	8.403	8.295	8.107	7.834	7.481
	115	7.914	7.962	8.056	8.169	8.286	8.394	8.381	8.257	8.088	7.977
	125	7.654	7.703	7.799	7.930	8.072	8.245	8.272	8.255	8.180	8.026
	135	6.751	6.862	7.081	7.281	7.466	7.774	7.990	7.942	7.980	7.840
R452A	75	6.230	6.287	6.363	6.418	6.428	6.276	6.116	5.823	5.469	4.864
	85	6.131	6.203	6.307	6.402	6.451	6.420	6.328	6.136	5.893	5.470
	95	5.970	6.054	6.180	6.306	6.383	6.441	6.397	6.219	6.104	5.795
	115	5.338	5.446	5.616	5.800	5.933	6.155	6.198	6.199	6.152	6.025
	125	4.809	4.928	5.119	5.331	5.490	5.788	5.870	5.925	5.931	5.880
	135	4.249	4.378	4.584	4.816	4.994	5.350	5.460	5.556	5.601	5.604

Capacity (TR)

US units

	Condensing temperature (°F)	ETS 6 – 40									
		Evaporation temperature [°F]									
		-40	-35	-25	-15	-5	15	25	35	45	55
R22	75	11.60	11.60	11.60	11.50	11.30	10.60	10.10	9.41	9.87	7.19
	85	11.90	11.90	11.90	11.90	11.80	11.30	10.90	10.30	11.20	8.63
	95	12.20	12.20	12.20	12.20	12.20	11.80	11.50	11.10	12.40	9.76
	115	12.40	12.40	12.50	12.60	12.60	12.50	12.30	12.10	14.00	11.30
	125	12.30	12.40	12.50	12.60	12.70	12.60	12.50	12.40	14.60	11.70
	135	12.10	12.20	12.40	12.50	12.60	12.70	12.60	12.50	15.00	12.00
R134a	75	8.34	8.39	8.45	8.47	8.44	8.14	7.84	7.38	6.73	5.77
	85	8.51	8.57	8.68	8.74	8.76	8.60	8.39	8.06	7.59	6.90
	95	8.62	8.70	8.84	8.94	9.01	8.97	8.84	8.62	8.28	7.78
	115	8.56	8.67	8.87	9.05	9.19	9.36	9.36	9.30	9.15	8.91
	125	8.37	8.50	8.73	8.94	9.12	9.37	9.43	9.43	9.37	9.21
	135	8.10	8.24	8.49	8.73	8.95	9.29	9.39	9.45	9.45	9.38
R404A	75	8.14	8.20	8.28	8.31	8.28	7.98	7.68	7.22	6.59	5.66
	85	8.02	8.09	8.22	8.30	8.32	8.18	7.98	7.67	7.21	6.56
	95	7.80	7.89	8.05	8.18	8.26	8.25	8.14	7.93	7.62	7.15
	115	6.93	7.06	7.29	7.49	7.66	7.88	7.91	7.87	7.76	7.55
	125	6.25	6.39	6.65	6.89	7.09	7.41	7.49	7.52	7.49	7.38
	135	5.41	5.56	5.85	6.12	6.36	6.75	6.89	6.98	7.02	6.99
R407C	75	11.80	11.80	11.90	11.90	11.90	11.50	11.20	10.70	9.99	9.01
	85	11.90	12.00	12.10	12.10	12.20	11.90	11.70	11.30	10.80	10.10
	95	11.90	12.00	12.20	12.30	12.30	12.30	12.10	11.80	11.40	10.90
	115	11.60	11.70	11.90	12.10	12.30	12.40	12.40	12.30	12.10	11.80
	125	11.20	11.30	11.60	11.80	12.00	12.20	12.30	12.30	12.10	11.90
	135	10.70	10.80	11.10	11.40	11.60	11.90	12.00	12.00	12.00	11.90
R410A	75	14.40	14.40	14.30	14.20	14.00	13.10	12.50	11.80	10.40	8.80
	85	14.50	14.60	14.60	14.50	14.30	13.70	13.20	12.70	11.60	10.40
	95	14.50	14.60	14.60	14.60	14.50	14.10	13.70	13.30	12.50	11.50
	115	14.00	14.10	14.20	14.30	14.30	14.20	14.00	13.80	13.30	12.70
	125	13.30	13.40	13.60	13.70	13.80	13.80	13.70	13.50	13.20	12.70
	135	12.40	12.50	12.80	12.90	13.10	13.10	13.10	13.00	12.80	12.40

Capacity (TR)

US units

	Condensing temperature (°F)	ETS 6 – 40									
		Evaporation temperature [°F]									
		-40	-35	-25	-15	-5	15	25	35	45	55
R32	75	22.645	22.569	22.342	21.991	21.505	19.970	18.868	17.427	15.595	13.108
	85	23.278	23.233	23.076	22.809	22.424	22.369	20.222	19.085	17.579	15.658
	95	23.709	23.693	23.600	23.409	23.114	22.103	21.359	20.392	19.193	17.653
	115	23.944	23.978	23.993	23.930	23.782	23.161	22.668	22.744	21.195	20.153
	125	23.637	23.693	23.755	23.748	23.663	23.205	22.815	22.283	21.612	20.753
	135	23.099	23.174	23.274	23.317	23.288	22.973	22.670	22.244	21.695	20.984
R290	75	11.77	11.82	11.86	11.84	11.74	11.21	10.74	10.06	9.13	7.79
	85	11.90	11.97	12.07	12.11	12.09	11.76	11.51	10.92	10.23	9.26
	95	11.90	12.00	12.14	12.24	12.28	12.13	11.91	11.56	11.05	10.34
	115	11.55	11.68	11.92	12.12	12.28	12.42	12.38	12.25	12.01	11.65
	125	11.15	11.30	11.58	11.83	12.04	12.30	12.34	12.30	12.17	11.93
	135	10.64	10.81	11.12	11.41	11.67	12.05	12.15	12.19	12.15	12.02
R448A	75	11.729	11.755	11.805	11.771	11.701	11.273	11.169	10.257	9.472	7.828
	85	11.710	11.831	12.070	12.170	12.208	12.069	12.104	11.507	11.054	10.039
	95	11.146	11.446	12.034	12.281	12.372	12.376	12.479	12.021	11.706	10.739
	115	11.160	11.330	11.666	11.891	12.063	12.271	12.470	12.201	12.067	11.526
	125	10.739	10.936	11.323	11.585	11.786	12.069	12.302	12.098	12.025	11.593
	135	9.419	9.580	9.895	10.183	10.451	10.862	10.998	11.074	11.090	11.007
R449A	75	11.729	11.755	11.805	11.771	11.701	11.273	11.169	10.257	9.472	7.828
	85	11.906	11.919	11.944	11.980	12.020	11.836	11.601	11.230	10.716	9.961
	95	11.901	11.915	11.942	12.012	12.098	12.040	11.885	11.615	11.225	10.719
	115	11.339	11.408	11.543	11.704	11.871	12.027	12.008	11.830	11.589	11.429
	125	10.967	11.037	11.175	11.362	11.565	11.814	11.851	11.827	11.720	11.499
	135	9.672	9.832	10.146	10.432	10.697	11.139	11.448	11.379	11.433	11.233
R452A	75	8.927	9.008	9.116	9.195	9.210	8.992	8.763	8.343	7.830	6.970
	85	8.784	8.887	9.037	9.173	9.243	9.199	9.066	8.792	8.443	7.838
	95	8.553	8.674	8.855	9.035	9.146	9.228	9.165	8.910	8.746	8.303
	115	7.648	7.803	8.047	8.310	8.501	8.819	8.880	8.882	8.814	8.632
	125	6.890	7.061	7.335	7.638	7.865	8.293	8.410	8.490	8.498	8.425
	135	6.088	6.272	6.567	6.900	7.156	7.665	7.823	7.961	8.024	8.029

Dimensions

ETS 6 – 10
ETS 6 – 14
ETS 6 – 25
ETS 6 – 32
ETS 6 – 40

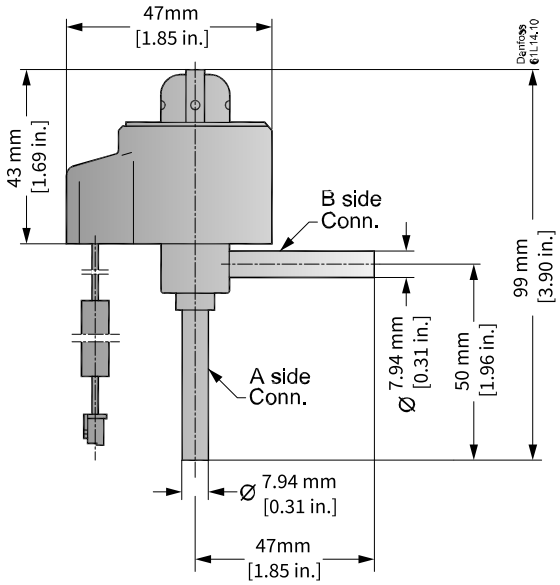

ETS 6 – 08
ETS 6 – 18

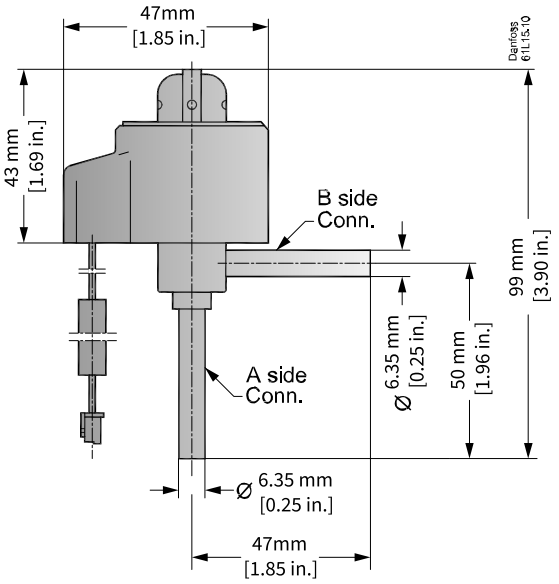

Weight: 0.16 kg (0.35 lbs) (complete)

Connections

Stepper motor switch sequence

	Coil I		Coil II		Common	
	Orange	Yellow	Red	Black	Gray	
↓ OPENING ↓	on	off	off	off	0	↑ CLOSING ↑
	on	off	on	off	0	
	off	off	on	off	0	
	off	on	on	off	0	
	off	on	off	off	0	
	off	on	off	on	0	
	off	off	off	on	0	
	on	off	off	on	0	

Electrical wiring

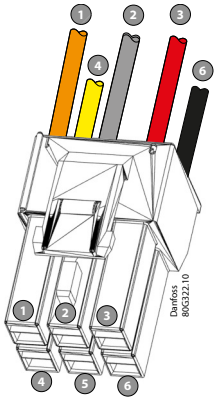

AMP UPC-6

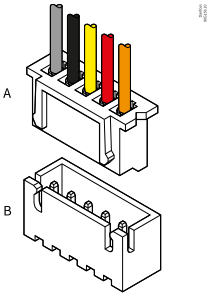

JST XHP-5

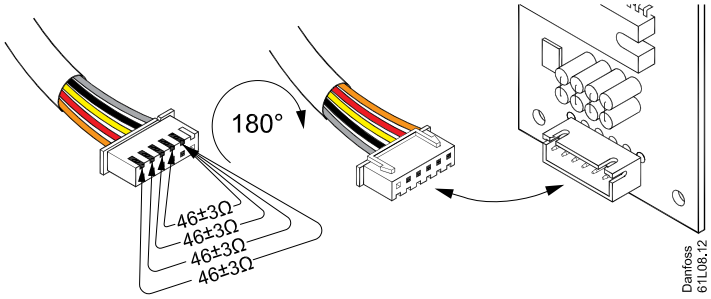

JST XHP-6 Controller

The illustration shows the JST XHP-6 connector. The coil with JST XHP-5 is identical except that it does not have an unused pin.

Certificates, declarations and approvals

The list contains all certificates, declarations, and approvals for this product type. Individual code number may have some or all of these approvals, and certain local approvals may not appear on the list.

When you click on the link you will be directed to the latest version of the 'Declaration of Conformity'. Products developed and sold before this date of issue conform to the directives/standards in force at the time of their sale.

Approval type	Title	Certification body	Approval topic
Mechanical Safety Certificate	UL MH7648	UL - Underwriters Laboratories inc.	
UA Declaration	Danfoss UA 2023-01-10 Valves PL01 PL40	Danfoss	PED, Pressure
Export Control Declaration	Electronic expansion Valve & Coil	Danfoss	
Manufacturer's Declaration	Danfoss MD 034R9814.AA	Danfoss	China RoHS
Manufacturer's Declaration	Danfoss MD 034R9836.AB	Danfoss	UK RoHS, EU RoHS, PED, Pressure
Electrical Safety Certificate	CQC 13002096598	CQC - China Quality Certification Centre	
Logo Printing Permission	CQC 20160643	CQC - China Quality Certification Centre	
Pressure Safety Certificate	LLC CDC EURO-TYSK UA.TR.089.1015.02-22	LLC CDC EURO TYSK - Ukraine	PED, Pressure

Contact details

Online support

Danfoss offers a wide range of support along with our products, including digital information, software, mobile apps and expert guidance. See the possibilities below.

The Danfoss Design center

Discover the Design Center, our advanced digital platform that streamlines product selection. With integrated tools and enhanced type pages, it's simpler than ever to access product information and documentation, and to select the right products. Check the availability of Danfoss products at partner locations and enjoy seamless transitions from selection to purchase with our basket-to-basket functionality. Whether you're buying from our distributors or directly from the Product Store, the Design Center simplifies your experience. Learn more at: designcenter.danfoss.com.

The Danfoss product store

The Danfoss Product Store is a one-stop shop available 24/7 for our customers, no matter where you are in the world or what area of industry you work in. Browse our catalog, check product details and documentation, view your prices and product availability, and quickly finalize your purchase. Start browsing at: store.danfoss.com.

Danfoss Partner Portal/Product Data tool

Designed to support you with easy access to product data extracts, essential resources, tools, and information. The Partner Portal provides a centralized hub for product documentation, training materials, marketing assets, and technical support, ensuring you have everything you need to succeed and grow your business with Danfoss. The Partner Portal is available 24/7 at: partner.danfoss.com and is ready to support your business.

Find technical documentation

Find technical documentation you need to get your project up running. Get direct access to our official collection of data sheets, certificates and declarations, manuals and guides, 3D models and drawings, case stories, brochures, and much more. Start searching now at: documentation.danfoss.com.

Danfoss Learning

Danfoss Learning is a free online learning platform. It features courses and materials specifically designed to help engineers, installers, service technicians, and wholesalers better understand the products, applications industry topics, and trends that will help you do your job better. Find your local Danfoss website here: learning.danfoss.com.

Get local information and support

Local Danfoss websites are the main sources for help and information about our company and products. Find product availability, get the latest reginal news, or connect with a nearby expert - all in your own language. Find your local Danfoss website here: danfoss.com.

Danfoss A/S

Climate Solutions . danfoss.com . +45 7488 2222

Any information, including, but not limited to information on selection of product, its application or use, product design, weight, dimensions, capacity or any other technical data in product manuals, catalogues description, advertisements, etc. and whether made available in writing, orally, electronically, online or via download, shall be considered informative, and is only binding if and to the extent, explicit reference is made in a quotation or order confirmation. Danfoss cannot accept any responsibility for possible errors in catalogues, brochures, videos and other material. Danfoss reserves the right to alter its products without notice. This also applies to products ordered but not delivered provided that such alterations can be made without changes to form, fit or function of the products. All trademarks in this material are property of Danfoss A/S or Danfoss group companies. Danfoss and the Danfoss logo are trademarks of Danfoss A/S. All rights reserved.