Data sheet



Pressure switch

Differential Pressure switch and Thermostat, RT-E

For explosive atmospheres (ATEX)

Description

The RT-E series consist of pressure and differential pressure switches as well as thermostats. The units are designed for industrial refrigeration and general industrial application in explosive zones acc. to 2014/34/EU ATEX directive, explosive zone 1, for surface equipment, category 2.
It includes usage in refrigeration systems with ammonia, hydrocarbons and other applications where presence of flammable gases, vapours and mists are likely to occur.
RT-E pressure switches and thermostats for use in explosive zones incorporate SPDT changeover switch where contact position depends on pressure or temperature value of the system.

Features & benefits

- Designed for use in explosive zone 1
- Versions with enclosure IP66
- Stainless steel frame
- Metallized front cover without window
- Gold plated contacts
- Safety Integrity Level: SIL 2 according to IEC 61508

Ordering

Product code numbers

Table: Pressure switches for R717*), HCFC, HFC and HC refrigerants

Type	Regulating range [bar]	Differential Δp [bar]	Max. working pressure PS [bar]	Reset	Code no.	
					Connection	
					G ⅜ A + welded nipple ø6.5/10 mm	G ⅜ A
RT 112E	0.1 – 1.1	0.07 – 0.16	7	Auto	–	017-518566
RT 113E	0.0 – 0.3	0.01 – 0.05	0.4	Auto	–	017-519566
RT 121E	-1.0 – 0.0	0.09 - 0.40	7	Auto	–	017-618466
RT 1AE	-0.8 – 5.0	0.5 – 1.6	22	Auto	017-500966	–
RT 116E	1 – 10	0.3 – 1.3	22	Auto	–	017-520166
RT 5E	4 – 17	1.2 – 4	22	Auto	–	017-525266
RT 6AEW (1)	5 – 25	3	34 (2)	Auto	017-513866	–
RT 6AEB (1)	10 – 28	1.5	34 (2)	Man. (Max.)	017-513466	–
RT 6AES (1)	10 – 28	1.5	34 (2)	Man. (Max.)	017-502166	–
RT 117E	10 – 30	1 – 4	42	Auto	–	017-529866

(1) W=Wächter (pressure control); B = Begrenzer (pressure control with external reset); S = Sicherheitsdruckbegrenzer (pressure control with internal reset)

(2) Max. working pressure acc. to PED is limited to 28 bar

*) Only types with letter A are suitable for R717

Table: Differential pressure switches for R717, HCFC, HFC and HC refrigerants

Type	Regulating range [bar]	Differential Δp [bar]	Operating range for LP bellows [bar]	Max. working pressure PS [bar]	Pressure connection	Code no.
RT 260AE	0.5 – 4	0.3	-1 – 18	22	G ⅜ A + welded nipple ø6.5/10 mm	017D003666
RT 262AE	0.1 – 1.5	0.1	-1 – 9	11		017D003066

Table: Thermostats

Type	Regulating range [°C]	Differential Δp		Max. sensor temperature [°C]	Type of charge	Capillary tube length [m]	Code no.
		At lowest range setting [°C]	At highest range setting [°C]				
RT 9E	-45 – -15	2.2 – 10	1 – 4.5	150	State vapour	5	017-617866
RT 14E	-5 – 30	2 – 8	2 – 10	150	Adsorption	2	017-509866
RT 14E	-5 – 30	2 – 8	2 – 10	150	Adsorption	5	017-617966
RT 101E	25 – 90	2.4 – 10	3.5 – 20	300	Adsorption	2	017-512666
RT 101E	25 – 90	2.4 – 10	3.5 – 20	300	Adsorption	5	017-618066
RT 107E	70 – 150	6 – 25	1.8 – 8	215	Partial	2	017-515366
RT 107E	70 – 150	6 – 25	1.8 – 8	215	Partial	5	017-618266
RT 123E	150 – 250	6.5 – 30	1.8 – 9	300	Partial	2	017-521666
RT 123E	150 – 250	6.5 – 30	1.8 – 9	300	Partial	5	017-618366

Table: Sensor pockets of RT-E thermostats

Type	Material	Code no.
RT 14E, RT 107E, RT 123E, RT 101E	Brass	017-437066
	18/8 stainless steel	017-436966

Product details

General data

Table: Technical data for RT-E type

Enclosure [1]	IP66 or IP54 (version with external manual reset)
Ambient temperature	- 20 – 65 °C
Cable entry	2 x Pg 13.5 cable diameter: 6 – 14 mm
Contact material	Gold plated AgCdO
Contact load	Must be used with a certified Ex ia barrier satisfying the input parameters
Contact system	Single-pole changeovers switch (SPDT)

[1] IP degree can only be obtained on enclosure without fractures / damages. RT-E must be protected against unintended impacts.

Adjustment

Figure: Range and differential adjustment

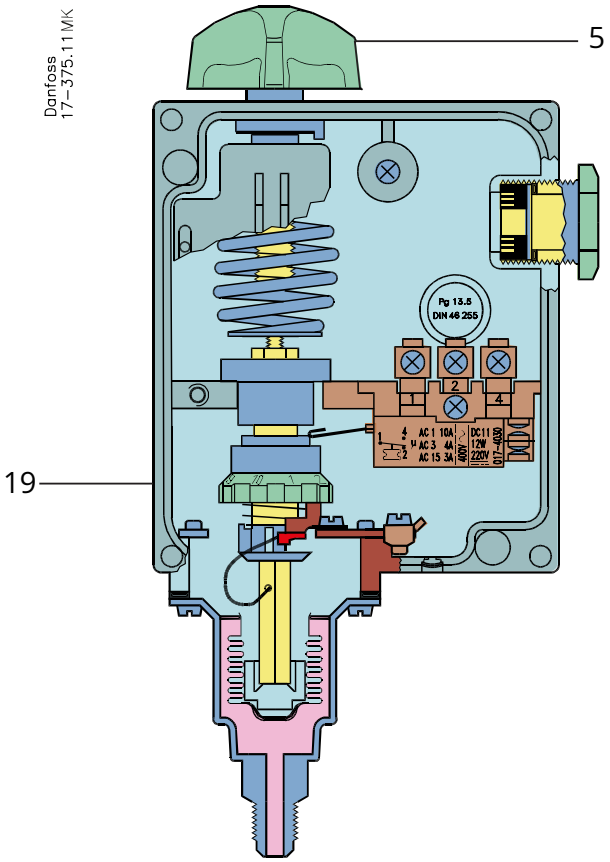

The range is set by using setting knob (5). Tools must be used to set switches fitted with seal cap. To read the range scale the front cover must be removed. On the units with adjustable differential, differential disc (19) must be set after removing front cover. For proper adjustment differential roller must be used. Detailed information can be found in RT data sheets, non-explosive version.

Design

Pressure switches

Figure: Pressure switch

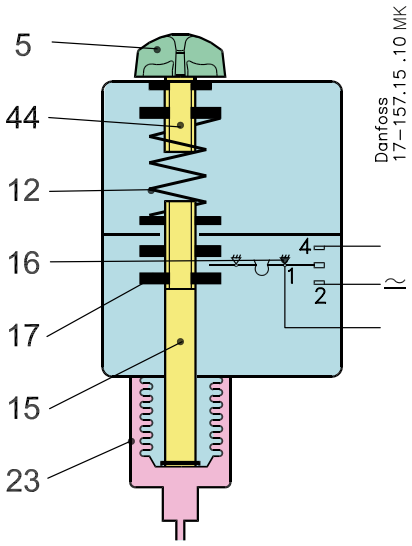

RT-E switches are similar to non-explosive version of RT. Main design changes include stainless steel frame and metalised front cover to keep surface resistance below 1 Gohm. By turning setting knob (5) the main spring (12) can be set to balance the pressure in the bellows. A rise in pressure compresses the bellows and moves the main spindle (15) upwards until spring and bellows pressure are in equilibrium. The main spindle (15) is fitted with the guide bush (17) and differential pressure setting nut that together transfer the main spindle movement to the switch (16). RTE6AEW/B/S has double fail-safe bellows: outer and regulating (inner bellows).

Differential pressure switches

Figure: Differential pressure switch

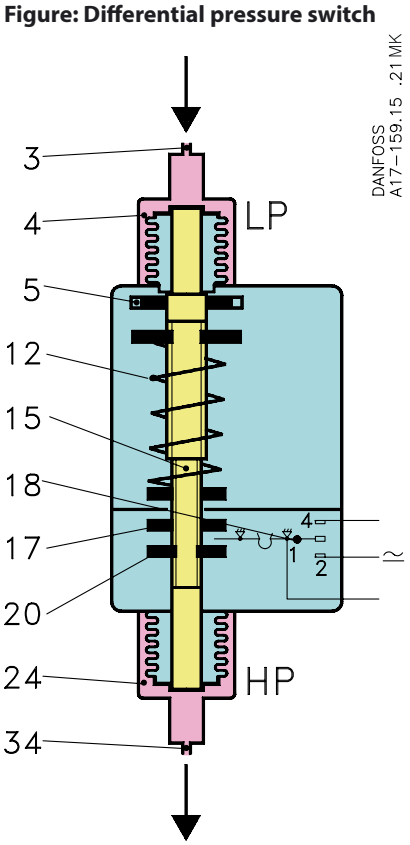

An RT-E differential pressure switch contains single-pole changeover switch that makes or breaks depending on pressure differential between two counteracting bellows elements (LP and HP). The bellows (4) and (24) are respectively connected to lower pressure port and higher pressure port. The main spring (12) can be set for different differential pressure by the setting disc (5). If the differential pressure between higher and lower pressure falls, the spindle (15) moves downwards and via the upper guide bush (17) actuates the switch contact arm (18). The reverse action occurs if the differential pressure rises.

Thermostats

Figure: Thermostat

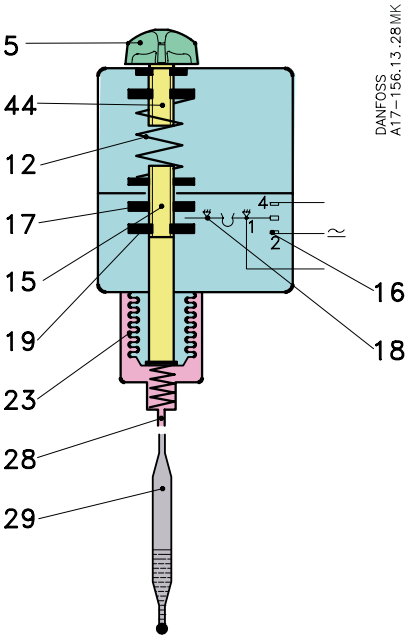

The thermostatic element consists of sensor (29), capillary tube (28) and bellows element (23). Charge in the element reacts to temperature variations and increases the pressure in the bellows when temperature rises. By turning the setting knob (5) the main spring (12) can be set to balance the pressure in the element. A rise in temperature of the sensor compresses the bellows and moves the main spindle (15) upwards until spring force and element pressure are in equilibrium. Such movement is transferred to the switch (16) and causes its on or off action.

Dimensions

Figure: RT-E housing (pressure switches and thermostats)

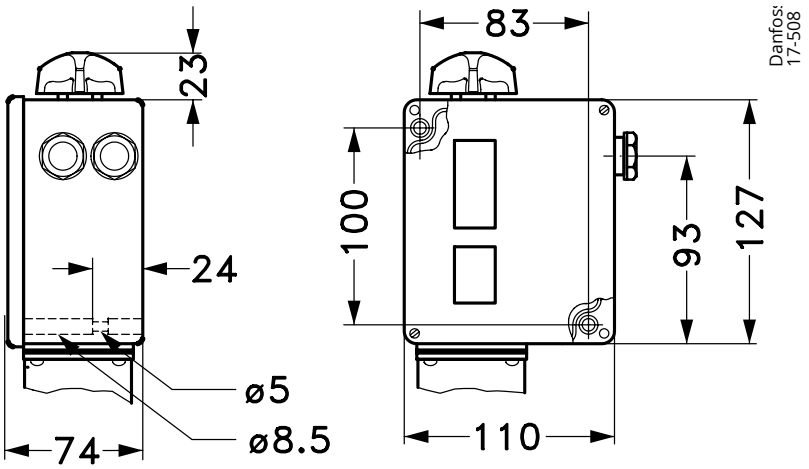

Figure: RT-E (pressure and differential pressure switches)

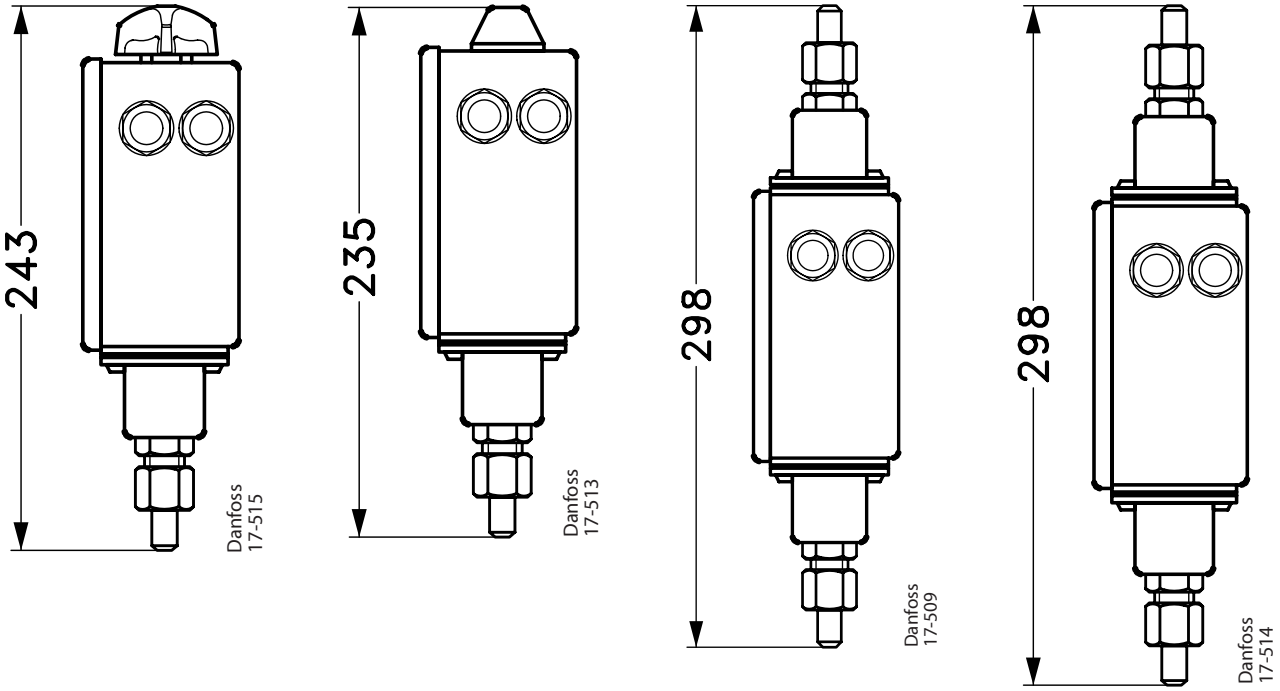

Connections

The RT-E pressure switch placed in explosive zone must always be wired through reliable Zener barrier, placed outside ex-zone, to ensure insufficient energy supply to cause the ignition of surrounding atmosphere by an electrical spark or the heating of components of circuitry.

The equipment to be used for electrical load limiting must always be approved for use in the zone concerned. Cables and cable entries approved for the application must be used and cannot be in contact with sharp edges. Cables must be connected with adequate stress relief that way that pulling forces cannot be carried through the cable to the terminal.

Wire dimension: min. 0.75mm^2

Note: A particular system can be classified in different zones, for different parts of the system.

Intrinsic safety protection method

Table: Electrical data for intrinsically safe specification

EX - zone	Non EX - zone	Electrical data for intrinsically safe specification (for all RT-E types):
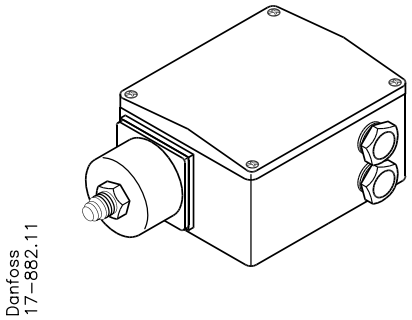	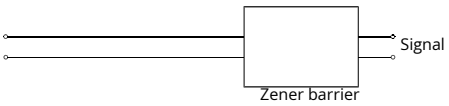	Ui: 29 V Ii: 0.5 A Pi: 1W Ci: 0.5 nF Li: 0.2 µH

Safety requirements

RT-E pressure, differential pressure switches and thermostats comply with the requirements for explosive atmosphere 2014/34/EU acc. to ATEX, zone 1.

Only apparatus designed, constructed and released by Danfoss must be used for application concerned. Danfoss can accept no responsibility in case of alterations made on the switches or the use of them against the Danfoss instructions. Original Danfoss spare parts approved for use in explosive atmosphere can only be used.

The application covers systems that must be located within the EU or EFTA and comply with the existing EU legislation, such as Pressure Equipment Directive (PED) 2014/68/EU, the directive concerning potential explosive atmosphere (ATEX) 2014/34/EU and other related EU standards. The system where RT-E is mounted must always comply with local directives, legislation or any other regulation applying in the area of installation.

The Danfoss products comply with the requirements of ATEX directive, but Danfoss takes no responsibility for the classification of explosive zone.

Installation

Only authorised persons, who are certified in installing and maintaining the systems may do the installation, maintenance and change of the switch.
In the event of strong pulsation in the system, bellows must be protected against fatigue failure by use of damping coil.
The cycle frequency of the RT-E switch must be kept as low as possible. The vibration level must be kept as low as possible.
Any overload of the RT-E switch must be prevented. Overloaded or damaged apparatus must be exchanged.

Certificates, declarations and approvals

The list contains all certificates, declarations, and approvals for this product type. Individual code number may have some or all of these approvals, and certain local approvals may not appear on the list.

When you click on the link you will be directed to the latest version of the 'Declaration of Conformity'. Products developed and sold before this date of issue conform to the directives/standards in force at the time of their sale.

Approval type	Title	Certification body	Approval topic
Manufacturer's Declaration	Danfoss MD 060-9639.AB	Danfoss	China RoHS
CCC Declaration	Danfoss CCC 2020970305003387	Danfoss	CCC
Explosive Safety Certificate	DEMKO 14 ATEX 1406X Rev. 4	UL Demko - UL International DEMKO A - S	ATEX
Explosive Safety Certificate	IECEx ULD 14.0013X_04	UL Demko - UL International DEMKO A - S	Explosive
EU Declaration	Danfoss EU 060-9657.AG	Danfoss	EU RoHS
Explosive Safety Certificate	UL21UKEX2021X	UL - Underwriters Laboratories inc.	Explosive
UK Declaration	Danfoss UK 060-9684.AA	Danfoss	ATEX
Electrical Safety Certificate	EAC KZ 7100841.01.01.01391	EAC - Eurasian Customs Union	EMC
Pressure Safety Certificate	TÜV 0879-PESR-B(P)-21484-12-DE	TÜV NORD - Technischer ÜberwachungsVerein	Pressure
UA Declaration	Danfoss UA 2023-01-10 Regulators PL01 PL04	Danfoss	Pressure
Pressure Safety Certificate	LLC CDC EURO-TYSK UA.TR.089.1015.05-22	LLC CDC EURO TYSK - Ukraine	Pressure
UK Declaration	Danfoss UK 060-9693.AC	Danfoss	ATEX
Quality Assurance Certificate	UL21UKQAN2258 Rev. 5	UL - Underwriters Laboratories inc.	Explosive
Explosive Safety Certificate	IECEx DK/ULD/QAR12.0002/11	UL Demko - UL International DEMKO A - S	Explosive
Quality Assurance Certificate	DEMKO 12 ATEX Q1209493 Rev. 13	UL Demko - UL International DEMKO A - S	ATEX
UA Declaration	Danfoss UA 2024-07-25 cooling sensors	Danfoss	LVD
Pressure Safety Certificate	TÜV 01 202 969 B-21-0013 01	TÜV Rheinland - Technischer ÜberwachungsVerein	Pressure
Explosive Safety Certificate	CCC 2020312304000764	CCC - China Compulsory Certification	Explosive
Export Control Declaration	Pressure switches & Thermostats	Danfoss	

Quality Assurance Certificate	TÜV 0045 202 9120 Z 00544 25 D 000 00	TÜV NORD - Technischer ÜberwachungsVerein	Pressure
EU Declaration	Danfoss EU 060-9655.AH	Danfoss	Pressure
Marine Certificate	RINA ELE305425XG	RINA - Registro Italiano Navale	

Contact details

Online support

Danfoss offers a wide range of support along with our products, including digital information, software, mobile apps and expert guidance. See the possibilities below.

The Danfoss Design center

Discover the Design Center, our advanced digital platform that streamlines product selection. With integrated tools and enhanced type pages, it's simpler than ever to access product information and documentation, and to select the right products. Check the availability of Danfoss products at partner locations and enjoy seamless transitions from selection to purchase with our basket-to-basket functionality. Whether you're buying from our distributors or directly from the Product Store, the Design Center simplifies your experience. Learn more at: designcenter.danfoss.com.

The Danfoss product store

The Danfoss Product Store is a one-stop shop available 24/7 for our customers, no matter where you are in the world or what area of industry you work in. Browse our catalog, check product details and documentation, view your prices and product availability, and quickly finalize your purchase. Start browsing at: store.danfoss.com.

Danfoss Partner Portal/Product Data tool

Designed to support you with easy access to product data extracts, essential resources, tools, and information. The Partner Portal provides a centralized hub for product documentation, training materials, marketing assets, and technical support, ensuring you have everything you need to succeed and grow your business with Danfoss. The Partner Portal is available 24/7 at: partner.danfoss.com and is ready to support your business.

Find technical documentation

Find technical documentation you need to get your project up running. Get direct access to our official collection of data sheets, certificates and declarations, manuals and guides, 3D models and drawings, case stories, brochures, and much more. Start searching now at: documentation.danfoss.com.

Danfoss Learning

Danfoss Learning is a free online learning platform. It features courses and materials specifically designed to help engineers, installers, service technicians, and wholesalers better understand the products, applications industry topics, and trends that will help you do your job better. Find your local Danfoss website here: learning.danfoss.com.

Get local information and support

Local Danfoss websites are the main sources for help and information about our company and products. Find product availability, get the latest reginal news, or connect with a nearby expert - all in your own language. Find your local Danfoss website here: danfoss.com.

Danfoss A/S

Climate Solutions . danfoss.com . +45 7488 2222

Any information, including, but not limited to information on selection of product, its application or use, product design, weight, dimensions, capacity or any other technical data in product manuals, catalogues description, advertisements, etc. and whether made available in writing, orally, electronically, online or via download, shall be considered informative, and is only binding if and to the extent, explicit reference is made in a quotation or order confirmation. Danfoss cannot accept any responsibility for possible errors in catalogues, brochures, videos and other material. Danfoss reserves the right to alter its products without notice. This also applies to products ordered but not delivered provided that such alterations can be made without changes to form, fit or function of the products. All trademarks in this material are property of Danfoss A/S or Danfoss group companies. Danfoss and the Danfoss logo are trademarks of Danfoss A/S. All rights reserved.