Data sheet



Filter drier, shell

DCR C

Danfoss ELIMINATOR® filter drier with replaceable solid core. Designed for liquid / suction lines in refrigeration and air-conditioning applications

Description

Danfoss ELIMINATOR® filter driers with replaceable solid core, type DCR C, are for use in liquid / suction lines in refrigeration and air-conditioning applications.
They offer a high system reliability by design and performance with a high flow rate.
All solid cores have an optimized uniform grain size ensuring effective dirt removal and low pressure drop. The robust solid cores withstand pressure surge and vibration.

Features & benefits

- DCR C housing and top cover:
  - PED and UL approved for PS up to 50 bar / 725 Psig
  - PED category II approved
  - Compatible with A1, A2l and A3 refrigerants
- Inserts for DCR C housing:
  - 48 - DM - 100% molecular sieve solid core Provides high moisture adsorption at low and high condensing temperatures
  - 48 - DC - 80% molecular sieve and 20% activated alumina solid core adsorbs moisture and acid in the system
  - 48 - F strainer Retains dirt particles larger than 15 µm
  - 48 - DA - 30% molecular sieve and 70% activated alumina solid core suitable after compressor burnout
  - All solid cores have an optimized uniform grain size ensuring effective dirt removal and low pressure drop. The robust solid cores withstand pressure surgeand vibration

Applications

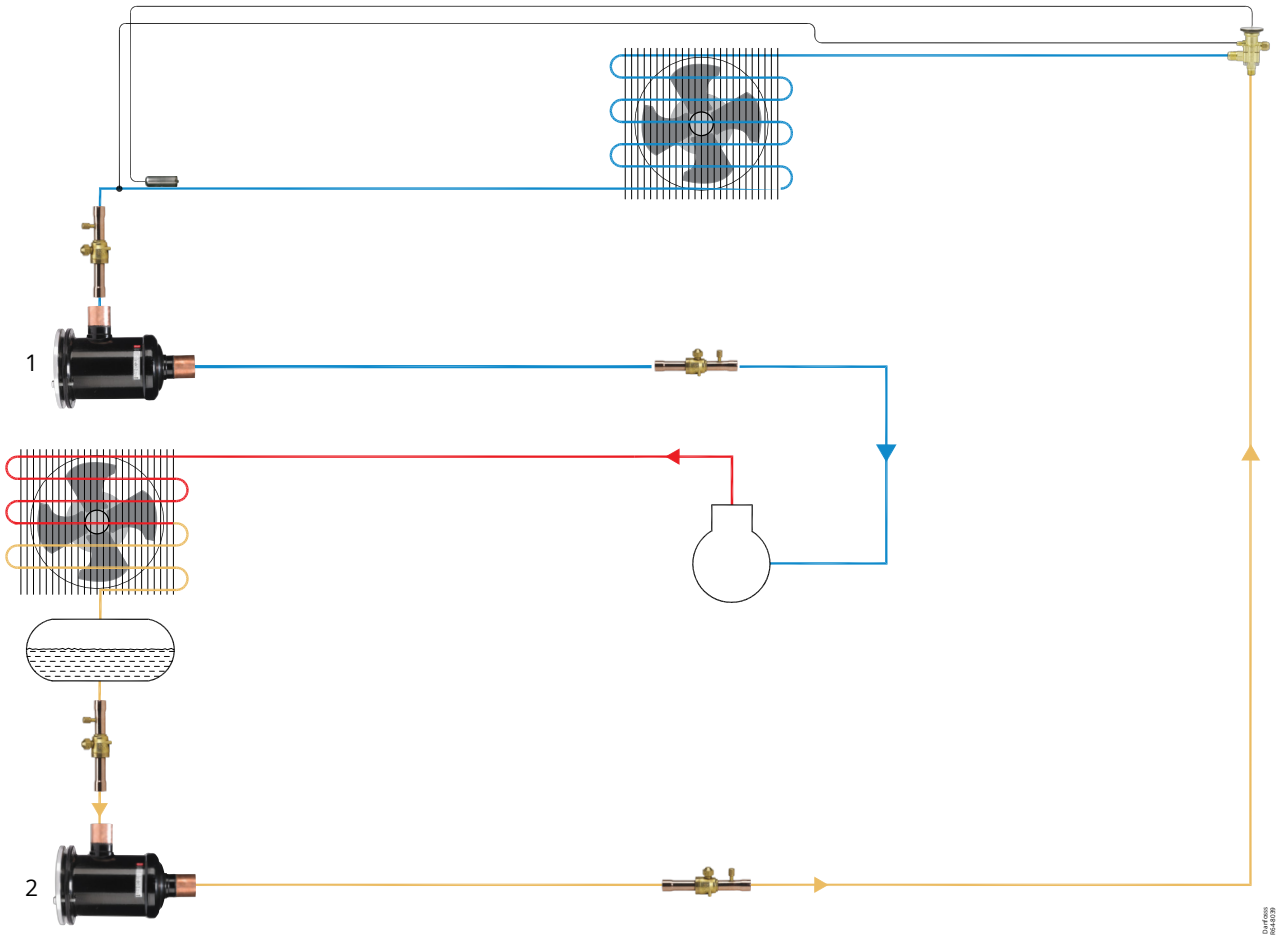

1	DCR C in suction line application	**2**	DCR C in Liquid line application

Ordering

Product code numbers

DCR C housing and insert are ordered separately. Select housing and top cover from the below table.

Figure: DCR C housing with copper connector



Table: Connection material Copper

Type designation	Number of cores	Connection material	Connection Solder size [in]	Connection Solder size [mm]	Cover	Max. Working Pressure [bar]	Code number
DCR 0485s C	1	Copper	5/8 in	16.00	Plug	50.0	023U7729
DCR 0487s C	1	Copper	7/8 in	22.00	Plug	50.0	023U7730
DCR 0489s C	1	Copper	1 1/8 in		Plug	50.0	023U7732
DCR 0489s C	1	Copper		28.00	Plug	50.0	023U7731
DCR 0489s C	1	Copper		28.00	Blank	50.0	023U7746
DCR 04811s C	1	Copper	1 3/8 in	35.00	Blank	50.0	023U7755
DCR 04811s C	1	Copper	1 3/8 in	35.00	Plug	50.0	023U7733
DCR 04813s C	1	Copper	1 5/8 in		Plug	50.0	023U7734
DCR 04813s C	1	Copper		42.00	Plug	50.0	023U7735
DCR 04813s C	1	Copper		42.00	Blank	50.0	023U7758
DCR 04817s C	1	Copper	2 1/8 in	54.00	Plug	50.0	023U7736
DCR 04821s C	1	Copper	2 5/8 in		Plug	50.0	023U7752
DCR 0967s C	2	Copper	7/8 in	22.00	Plug	50.0	023U7737
DCR 0969s C	2	Copper	1 1/8 in		Plug	50.0	023U7739
DCR 0969s C	2	Copper		28.00	Plug	50.0	023U7738
DCR 09611s C	2	Copper	1 3/8 in	35.00	Plug	50.0	023U7740
DCR 09611s C	2	Copper	1 3/8 in	35.00	Blank	50.0	023U7756
DCR 09613s C	2	Copper	1 5/8 in		Plug	50.0	023U7741
DCR 09613s C	2	Copper		42.00	Plug	50.0	023U7742
DCR 09617s C	2	Copper	2 1/8 in	54.00	Blank	50.0	023U7757
DCR 09617s C	2	Copper	2 1/8 in	54.00	Plug	50.0	023U7743
DCR 09621s C	2	Copper	2 5/8 in		Plug	50.0	023U7753
DCR 1449s C	3	Copper		28.00	Plug	50.0	023U7744
DCR 14411s C	3	Copper	1 3/8 in	35.00	Plug	50.0	023U7745
DCR 14413s C	3	Copper	1 5/8 in		Plug	50.0	023U7754
DCR 14413s C	3	Copper		42.00	Plug	50.0	023U7747
DCR 14417s C	3	Copper	2 1/8 in	54.00	Plug	50.0	023U7748
DCR 19211s C	4	Copper	1 3/8 in		Blank	50.0	023U7727
DCR 19213s C	4	Copper		42.00	Plug	50.0	023U7750
DCR 19213s C	4	Copper	1 5/8 in		Plug	50.0	023U7749
DCR 19213s C	4	Copper	1 5/8 in		Blank	50.0	023U7726
DCR 19217s C	4	Copper	2 1/8 in	54.00	Plug	50.0	023U7751

Figure: DCR C housing with Steel connector



Table: Connection material Steel

Type designation	Number of cores	Connection material	Connection Solder size [in]	Connection Solder size [mm]	Connection Weld size [in]	Cover	Max. Working Pressure [bar]	Code number
DCR 0485 C	1	Steel	5/8 in	16.00	1/2 in	Plug	50.0	023U7700
DCR 0487 C	1	Steel	7/8 in	22.00	3/4 in	Plug	50.0	023U7701
DCR 0489 C	1	Steel		28.00	1 in	Plug	50.0	023U7702
DCR 0489 C	1	Steel	1 1/8 in		1 in	Plug	50.0	023U7703
DCR 04811 C	1	Steel	1 3/8 in	35.00	1 1/4 in	Plug	50.0	023U7704
DCR 04813 C	1	Steel	1 5/8 in		1 1/2 in	Plug	50.0	023U7705
DCR 04813 C	1	Steel		42.00	1 1/2 in	Plug	50.0	023U7706
DCR 04817 C	1	Steel	2 1/8 in	54.00	2 in	Plug	50.0	023U7707
DCR 04821 C	1	Steel	2 5/8 in		2 1/2 in	Plug	50.0	023U7725
DCR 0967 C	2	Steel	7/8 in	22.00	3/4 in	Plug	50.0	023U7708
DCR 0969 C	2	Steel		28.00	1 in	Plug	50.0	023U7709
DCR 0969 C	2	Steel	1 1/8 in		1 in	Plug	50.0	023U7710
DCR 09611 C	2	Steel	1 3/8 in	35.00	1 1/4 in	Plug	50.0	023U7711
DCR 09613 C	2	Steel	1 5/8 in		1 1/2 in	Plug	50.0	023U7712
DCR 09613 C	2	Steel		42.00	1 1/2 in	Plug	50.0	023U7713
DCR 09617 C	2	Steel	2 1/8 in	54.00	2 in	Plug	50.0	023U7714
DCR 1449 C	3	Steel		28.00	1 in	Plug	50.0	023U7715
DCR 1449 C	3	Steel	1 1/8 in		1 in	Plug	50.0	023U7716
DCR 14411 C	3	Steel	1 3/8 in	35.00	1 1/4 in	Plug	50.0	023U7717
DCR 14413 C	3	Steel	1 5/8 in		1 1/2 in	Plug	50.0	023U7718
DCR 14413 C	3	Steel		42.00	1 1/2 in	Plug	50.0	023U7719
DCR 14417 C	3	Steel	2 1/8 in	54.00	2 in	Plug	50.0	023U7720
DCR 19211 C	4	Steel	1 3/8 in	35.00	1 1/4 in	Plug	50.0	023U7721
DCR 19213 C	4	Steel	1 5/8 in		1 1/2 in	Plug	50.0	023U7722
DCR 19213 C	4	Steel		42.00	1 1/2 in	Plug	50.0	023U7723
DCR 19217 C	4	Steel	2 1/8 in	54.00	2 in	Plug	50.0	023U7724
DCR 19221 C	4	Steel	2 5/8 in		2 1/2 in	Plug	50.0	023U7728

Accessories code numbers

Table: DCR C inserts code numbers

Type	Material	Code number		
		Industrial pack		Multi pack
		(8 pcs.)		(3 pcs.)
		with gasket	without gasket	with gasket
48-DM solid core	100% molecular sieve	–	023U1393	–
48-DC solid core	80% molecular sieve & 20% Al_3O_2	–	023U4382	–
48-DA solid core	30% molecular sieve & 70% $A_{l3}O_2$	–	023U5382	–
48-F strainer	Felt-gasket, 15 µm	–	–	–

(1) DC filter driers cores contain activated alumina, which is a polar material used for acid adsorption. Many oil additives are also polar substances and can be adsorbed by the activated alumina, rendering them useless, and reducing the drier's acid capacity, though this is not harmful to the system.

Spare parts code numbers

Table: Spare parts list

Part description	Quantity	Code number
Single core internal assembly	1	023U7796
Two core internal assembly	1	023U7797
Three core internal assembly	1	023U7798
Four core internal assembly	1	023U7799
Top cover with plug	1	023U7792
Top cover without plug	1	023U7791
Top cover gasket	10	023U7794
Plug for cover	10	023U7795
Bolts for cover	8	023U7793

Functions

Danfoss ELIMINATOR® filter driers with replaceable solid core, type DCR C protect refrigeration, systems from moisture, acids, and solid particles. With these contaminants eliminated, systems are safer from harmful chemical reactions and from abrasive impurities.

Figure: DCR C

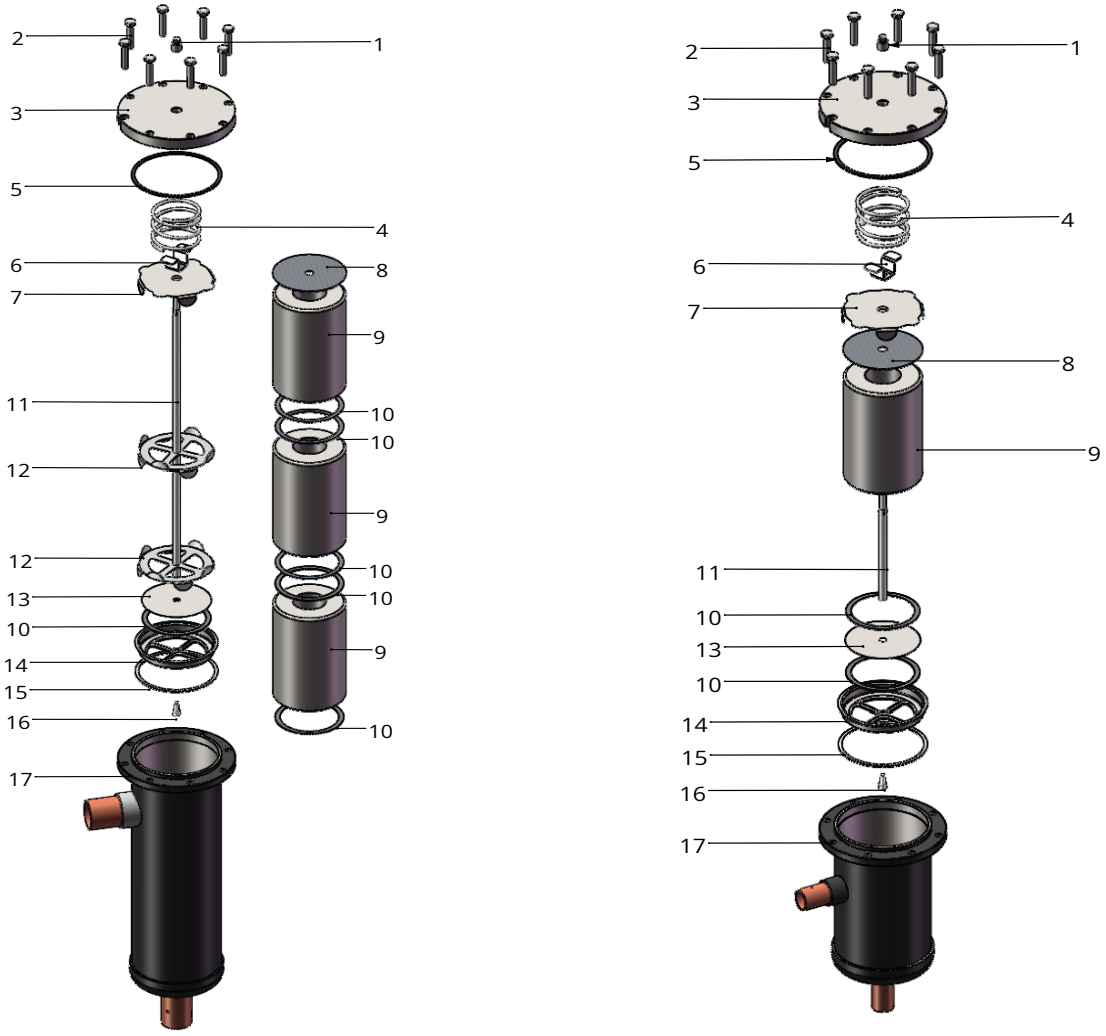

Inner taper of core always facing towards filter outlet. This apply for all DCR C Families.

1	Plug for cover	**10**	Core felt gasket
2	Bolts for cover	**11**	Distance rod
3	Top cover	**12**	Core plate
4	Spring	**13**	Wire Mesh
5	Top cover gasket	**14**	Core holder
6	Wing nut	**15**	Gasket
7	Top plate	**16**	Hex socket head screw
8	Core felt gasket	**17**	Shell
9	Solid core		

Product details

General data

Table: Technical data

Parameter	Specification
Maximum working pressure	50 bar / 725psig
Temperature range	-40 – +120 °C
Housing material	Q355ME
Cover material	Q355ME
Gasket material	AFM 34
Core holder material	DC01
Bolt material	42CrMo4

Indentification

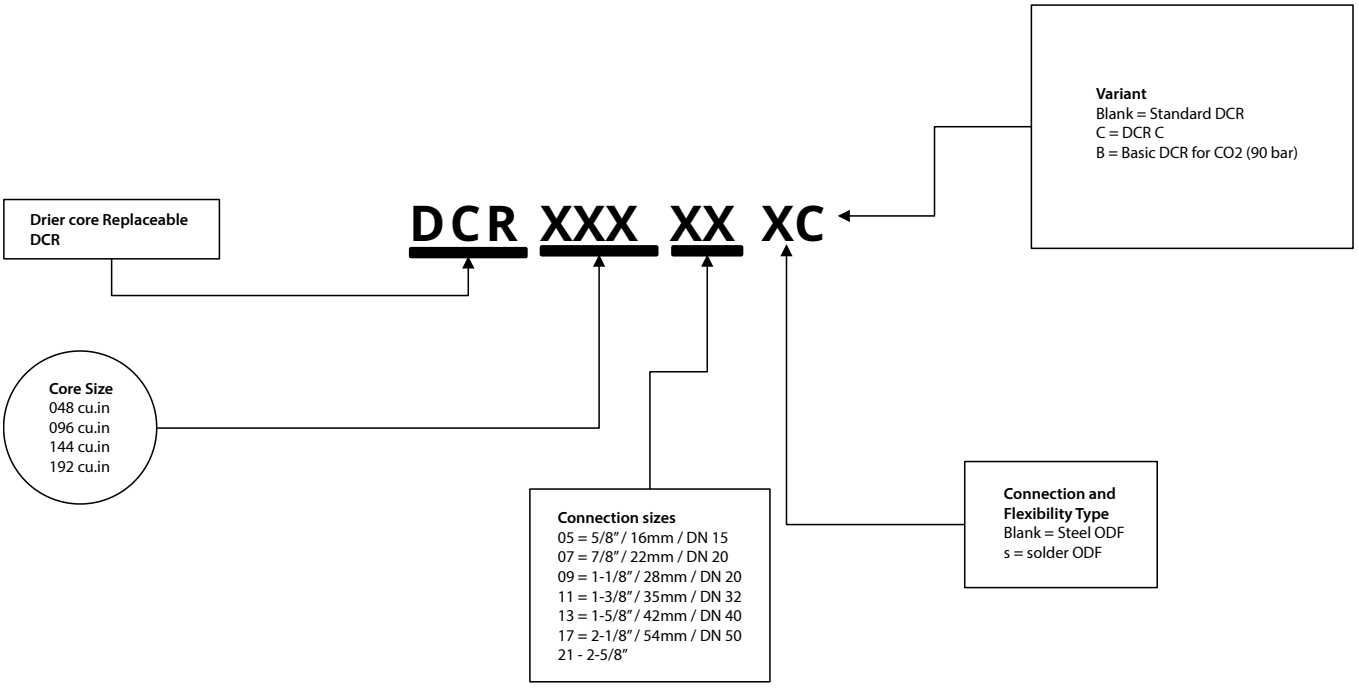

Table: Core selection

Refrigerant and oil types		DC	DM	DA
Refrigerant	R1234ze(E), R125, R134a, R22/R407C, R32, R404A, R407A, R407F, R410A, R438A, R448A, R449A, R449B, R450A, R452A, R507A, R513A, R452B, R1234yf, R457A, R516A, R457A, R444B, R290, R454A, R454B, R454C, R455A, R1234zd, R600a, R601, R601a, R1336mzz(Z), R515B, R1233zd, R245fa	Recommended	Recommended	Recommended
Oil	Mineral or AB	Recommended	Recommended	Recommended
	POE or PAG, pure	Recommended	Recommended	Recommended
	POE or PAG, with additives	Not recommended [1]	Recommended	Not recommended

[1] DC filter driers cores contain activated alumina, which is a polar material used for acid adsorption. Many oil additives are also polar substances and can be adsorbed by the activated alumina, rendering them useless, and reducing the drier's acid capacity, though this is not harmful to the system.

Capacity

Figure: DCR C insert

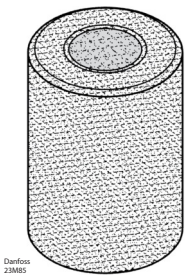

Table: Core surface and volume

Core	surface	volume
	[cm²]	[cm³]
DM/ DC / DA 048	612	727
DM /DC/DA 096	1225	1454
DM /DC/DA 144	1837	2181
DM/DC/DA 192	2450	2908
48-F	405	–

Dimensions

Figure: DCR C housing

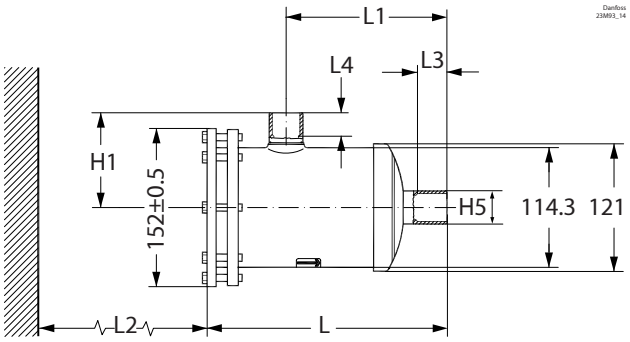

Figure: DCR C top cover

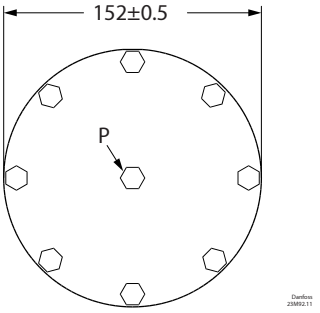

P – Plug 1/4 in. NPT

Figure: Solid core

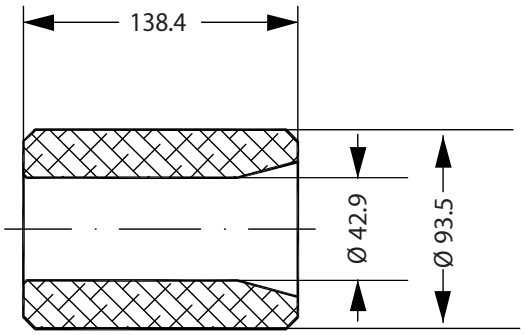

48-DM, 48-DC and 48-DA

Table: Dimension

Type	No. of cores	DCR C with steel connectors						
		L [mm]	L1 [mm]	L2 [mm]	L3 [mm]	L4 [mm]	H1 [mm]	H5 [mm]
DCR 0485C	1	250.5	162.7	170	12	12	95.00	16.05
DCR 0487C	1	247.0	156.8	170	17	17	90.30	22.28
DCR 0489C	1	248.1	160.2	170	22	22	94.30	28.05
DCR 04811C	1	250.5	162.6	170	25	25	97.30	35.05
DCR 04813C	1	251.9	167.8	170	29	29	100.30	41.35
DCR 04817C	1	257.6	173.5	170	33	33	110.80	54.05
DCR 04821C	1	264.2	176.3	170	38	38	115.80	66.75
DCR 0967C	2	387.0	295.8	310	17	17	90.30	22.28
DCR 0969C	2	388.1	299.2	310	22	22	94.30	28.65
DCR 09611C	2	390.5	301.6	310	25	25	97.30	35.05
DCR 09613C	2	391.9	306.8	310	29	29	100.30	41.35
DCR 09617C	2	397.6	312.5	310	33	33	110.80	54.10
DCR 1449C	3	530.1	441.2	450	22	22	94.30	28.65
DCR 14411C	3	532.5	443.6	450	25	25	97.30	35.05
DCR 14413C	3	533.9	448.8	450	29	29	100.30	41.35
DCR 14417C	3	539.6	454.5	450	33	33	110.80	54.05
DCR 19211C	4	672.5	583.6	590	25	25	97.30	35.05
DCR 19213C	4	673.9	588.8	590	29	29	100.30	42.05
DCR 19217C	4	679.6	594.5	590	33	33	110.80	54.10
DCR 19221C	4	686.2	597.3	590	38	38	115.80	66.75

Table: Dimension

Type	No. of cores	DCR C with copper connectors						
		L [mm]	L1 [mm]	L2 [mm]	L3 [mm]	L4 [mm]	H1 [mm]	H5 [mm]
DCR 0485sC	1	262.9	179.7	170	10.00	10.00	112.80	16.05
DCR 0487sC	1	265.0	179.3	170	15.50	15.50	112.80	22.28
DCR 0489sC	1	267.2	181.7	170	18.67	18.67	115.80	28.65
DCR 04811sC	1	270.4	184.1	170	23.60	23.60	118.80	35.05
DCR 04813sC	1	271.8	185.5	170	27.70	27.70	120.80	41.35
DCR 04817sC	1	274.1	187.5	170	32.67	32.67	124.83	54.05
DCR 04821sC	1	275.9	187.5	170	31.40	31.40	124.83	66.75
DCR 0967sC	2	401.2	315.7	310	15.50	15.50	112.80	22.28
DCR 0969sC	2	406.2	320.7	310	18.67	18.67	115.80	28.65
DCR 09611sC	2	409.4	323.1	310	23.60	23.60	118.80	35.05
DCR 09613sC	2	410.8	324.5	310	27.70	27.70	120.80	41.35
DCR 09617sC	2	413.1	326.5	310	32.67	32.67	124.83	54.05
DCR 09621sC	2	414.9	326.5	310	31.40	31.40	124.83	66.75
DCR 1449sC	3	548.2	462.7	450	18.67	18.67	115.80	28.65
DCR 14411sC	3	551.4	465.1	450	23.60	23.60	118.80	35.05
DCR 14413sC	3	552.8	466.5	450	27.70	27.70	120.80	41.35
DCR 14417sC	3	555.1	468.5	450	32.67	32.67	124.83	54.05
DCR 19211sC	4	691.4	605.1	590	23.60	23.60	118.80	35.05
DCR 19213sC	4	692.8	606.5	590	27.70	27.70	120.80	41.35
DCR 19217sC	4	696.1	608.5	590	32.67	32.67	124.83	54.05

Certificates, declarations and approvals

The list contains all certificates, declarations, and approvals for this product type. Individual code number may have some or all of these approvals, and certain local approvals may not appear on the list.

When you click on the link you will be directed to the latest version of the 'Declaration of Conformity'. Products developed and sold before this date of issue conform to the directives/standards in force at the time of their sale.

Approval type	Title	Issuer	Approval topic
Export Control Declaration	Filter drier DCR C	Danfoss	
EU Declaration	EU-declaration 023U9617.AA	Danfoss	PED
Manufacturer's Declaration	Manufacturer's declaration 023U9616.AA	Danfoss	EU RoHS, PED
Manufacturer's Declaration	Manufacturer's declaration 023U9615.AA	Danfoss	China RoHS
Statement of Compliance	IRF (PL40) products Vacuum evacuation	Danfoss	
EU Declaration	EU DOC PL01 Packaging	Danfoss	Packaging
Mechanical Safety Certificate	UL-US-26130086-0 / UL-CA-2695730-0	UL - Underwriters Laboratories inc.	UL-CSA

Approval type	Title	Issuer	Approval topic
UL Certification	UL SA6398	UL	UL 207 : UL

Contact details

Online support

Danfoss offers a wide range of support along with our products, including digital information, software, mobile apps and expert guidance. See the possibilities below.



The Danfoss Design center

Discover the Design Center, our advanced digital platform that streamlines product selection. With integrated tools and enhanced type pages, it's simpler than ever to access product information and documentation, and to select the right products. Check the availability of Danfoss products at partner locations and enjoy seamless transitions from selection to purchase with our basket-to-basket functionality. Whether you're buying from our distributors or directly from the Product Store, the Design Center simplifies your experience. Learn more at: designcenter.danfoss.com.



The Danfoss product store

The Danfoss Product Store is a one-stop shop available 24/7 for our customers, no matter where you are in the world or what area of industry you work in. Browse our catalog, check product details and documentation, view your prices and product availability, and quickly finalize your purchase. Start browsing at: store.danfoss.com.



Danfoss Partner Portal/Product Data tool

Designed to support you with easy access to product data extracts, essential resources, tools, and information. The Partner Portal provides a centralized hub for product documentation, training materials, marketing assets, and technical support, ensuring you have everything you need to succeed and grow your business with Danfoss. The Partner Portal is available 24/7 at: partner.danfoss.com and is ready to support your business.



Find technical documentation

Find technical documentation you need to get your project up running. Get direct access to our official collection of data sheets, certificates and declarations, manuals and guides, 3D models and drawings, case stories, brochures, and much more. Start searching now at: documentation.danfoss.com.



Danfoss Learning

Danfoss Learning is a free online learning platform. It features courses and materials specifically designed to help engineers, installers, service technicians, and wholesalers better understand the products, applications industry topics, and trends that will help you do your job better. Find your local Danfoss website here: learning.danfoss.com.



Get local information and support

Local Danfoss websites are the main sources for help and information about our company and products. Find product availability, get the latest reginal news, or connect with a nearby expert - all in your own language. Find your local Danfoss website here: danfoss.com.

Danfoss A/S

Climate Solutions . danfoss.com . +45 7488 2222

Any information, including, but not limited to information on selection of product, its application or use, product design, weight, dimensions, capacity or any other technical data in product manuals, catalogues description, advertisements, etc. and whether made available in writing, orally, electronically, online or via download, shall be considered informative, and is only binding if and to the extent, explicit reference is made in a quotation or order confirmation. Danfoss cannot accept any responsibility for possible errors in catalogues, brochures, videos and other material. Danfoss reserves the right to alter its products without notice. This also applies to products ordered but not delivered provided that such alterations can be made without changes to form, fit or function of the products. All trademarks in this material are property of Danfoss A/S or Danfoss group companies. Danfoss and the Danfoss logo are trademarks of Danfoss A/S. All rights reserved.