8526FT IL BAGNO ALESSI One by Oras - Washbasin faucet, 230/12 V

EAN: 6414150076473
www.oras.com/en/products/oras/product/8526FT

Touchless washbasin faucet with a temperature adjustment handle, a Bidetta hand shower and a rapid pop-up waste. The faucet is equipped with litter filters, non-return valves, flexible pipes and Autofocus sensor which enables installation without adjustments. Flow controller (6 l/min) enables low water consumption. Electrical connection with a plug transformer 230/12 V. Alternative: concealed power supply 199275. A maximum five of these items can be connected to the power supply at a time.F = with flexible pipes

- Public & Semi-public
- Touchless, Plug-in transformer, Bidetta
- Deck mounted
- Chrome
- Temperature control handle
- Push pop-up waste without draw-rod
- Bidetta hand shower
- adjustable mix water temperature
- Litter filter(s)
- Autofocus sensor

Technical data

Flow properties

Flow-rate at 300 kPa (with flow controller)	**0.1 l/s**
Pressure loss with flow (0.1 l/s)	**250 kPa**

Technical properties

Hot water supply	**max. +70°C**
Working pressure	**100 - 1000 kPa**
Connection size	**G3/8**
Projection	**90 mm**
Material	**brass**

Software settings

Afterflow period	**2 s ± 1 s**
Max. flow period	**2 min**

Electronic properties

Electrical Connection	**230 / 12 V**

Regulations

EMC Directive	**CE 2004/108/EY**
EN standard	**EN 15091**
Noise class	**I (ISO 3822)**
Protection class	**IP 55 / transformer IP 40**

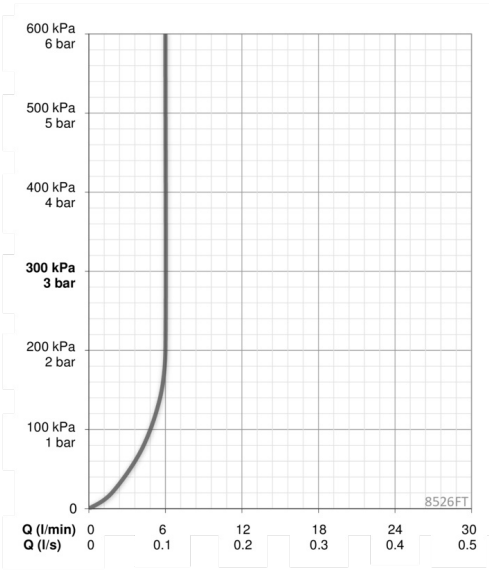

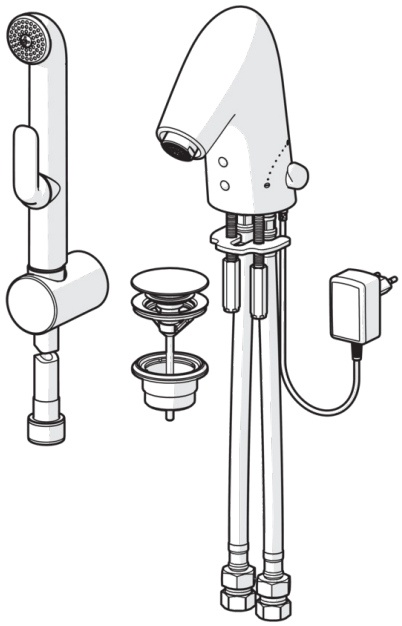

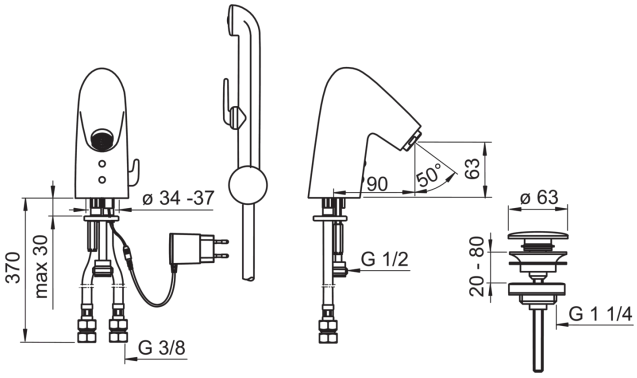

Spare parts

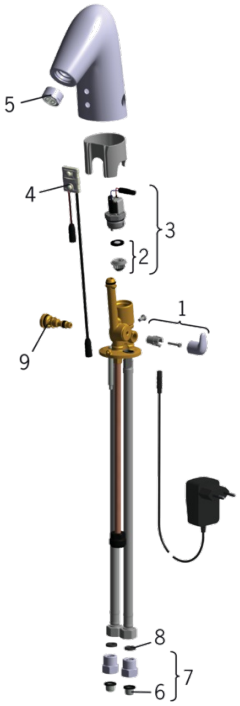

SP8526FT

	Code
01	600581V
02	199205V
03	199206V
04	600974V
05	601166V
06	199257/2
07	198473/2
08	600705/10
09	199201V