6155F Oras Electra - Washbasin faucet, 6 V

EAN: 6414150079740
www.oras.com/en/products/oras/product/6155F

Touchless washbasin faucet with a temperature adjustment handle. Battery-operated 6 V. The faucet is equipped with litter filters, non-return valves and flexible pipes.
No adjustments need to be made at installation because an advanced Autofocus sensor is used. The impulse-controlled solenoid valve gives the battery a long operating life. Flow controller (6 l/min.) enables low water consumption (0.5 l / instance of use).

- Public & Semi-public, Health & Care
- Battery-operated, Touchless
- Deck mounted
- Chrome
- Fixed spout
- PCA® for a constant flow rate regardless of pressure fluctuations
- Temperature control handle
- Litter filter(s), Non-return valve(s)
- Autofocus sensor, Impulse-controlled solenoid valve

Technical data

Flow properties

Flow-rate at 300 kPa (with flow controller)	**0.1 l/s**
Pressure loss with flow (0.1 l/s)	**200 kPa**

Technical properties

Hot water supply	**max. +70°C**
Working pressure	**100 - 1000 kPa**
Connection size	**G3/8**
Projection	**126 mm**
Material	**brass**

Software settings

Afterflow period	**2 s ± 1 s**
Max. flow period	**2 min**

Electronic properties

Battery	**Lithium 2CR5 6 V**

Regulations

EMC Directive	**CE 2014/30/EU**
EN standard	**EN 15091**
Noise class	**I (ISO 3822)**
Protection class	**IP 55**

Type approvals

STF certificate	**STF VTT-RTH-00031-11**
ETA-Danmark	**VA 1.42/20792**

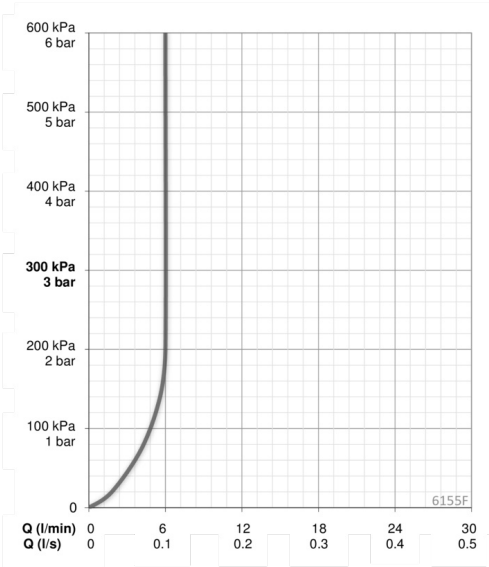

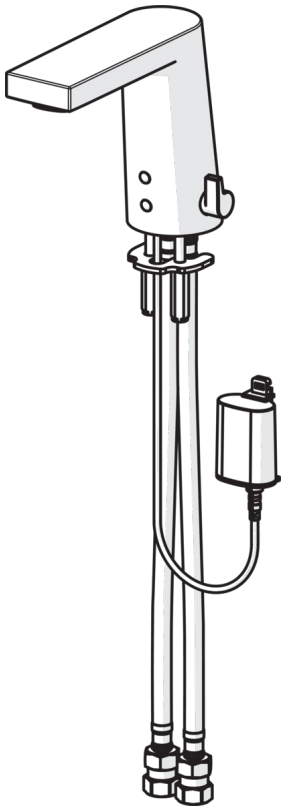

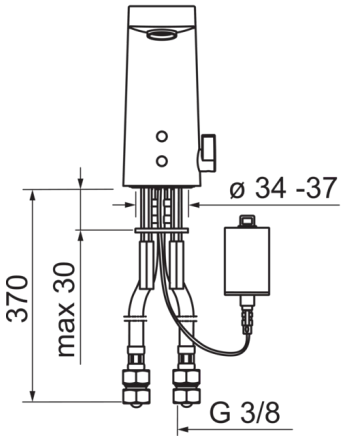

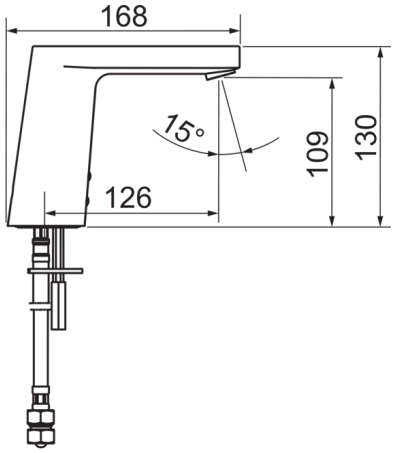

Spare parts

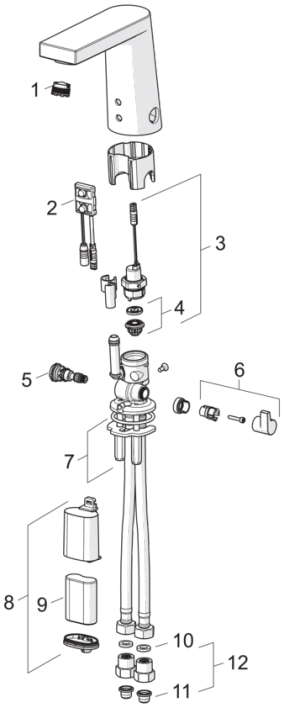

SP6155F

	Code
01	601901V
02	1001424V
02	600659V
03	199206V
04	199205V
05	199201V
06	601877V
07	158697
08	199417V
09	198330
10	600705/10
11	199257/2
12	198473/2