Sensor Casambi PIR Recessed

hidealite

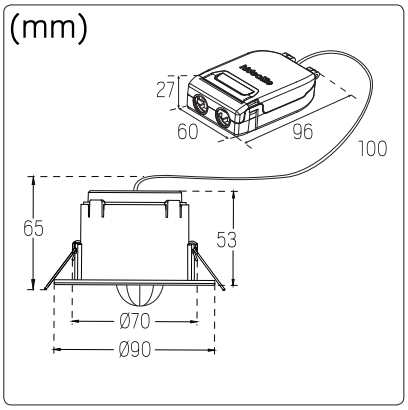

E-nr	Snro	El.nr	GTIN	Name
13 021 08	26 06 110	14 037 14	7392971153575	Sensor Casambi PIR Rcessed

IP20 | -0°C +50°C | PIR sensor | DT8 | DT6

For explanation of symbols see www.hidealite.se

PRODUCT DESCRIPTIONS

The recessed mounted sensor combines presence sensing, daylight harvesting, DALI diming, rely and Casambi wireless technology. The sensor can work with DALI LED drivers or luminaires.
The result is increased occupant comfort and significant energy savings that meet the most demanding building energy codes. The sensor is suitable for low-bay applications which need sensor-based automation.

CASAMBI TECHNOLOGY EXPLAINED

Casambi technology provides a mesh network where all the intelligence of the system is replicated in every node and, in such a way, creates a system with no single point of failure. In this kind of fully distributed architecture, any unit can go offline and catch up with others when they return online.

WIRELESS FEATURES

- Control a large number of fixtures
- Simple to use via Casambi APP
- Easy to install
- Wide range of functionality

Grouping luminaries, scenarios, animations, color temperature, occupancy sensor, daylight sensor and much more

Note!

Different materials affect Casambi Mesh signals in various ways:
- **Metal**: Blocks or weakens signals significantly.
- **Concrete, Brick**: Reduce signal range.
- **Wood, Glass, Plastic**: Minimal impact.

Proper placement is vital for strong signals, avoiding obstructions like metal and dense walls to ensure reliable connectivity. Care to check signal levels.

For optimal performance, we recommend maintaining an approximate distance of 20meters between Casambi devices under good conditions. This helps ensure strong and reliable connectivity.

CASAMBI

Download on the App Store | GET IT ON Google Play

To be used through APP available on Apple Store and Play Store for iOS and Android.

SAFETY INSTRUCTIONS

en Read these instructions carefully before commencing installation and retain for future reference. All connections to the driver must only be made by a qualified electrician or a person with the necessary expertise in electrical installation in accordance with the relevant rules and standards. Make sure that the power is off before installation or maintenance.

sv Läs dessa instruktioner före installationen påbörjas och lämna den vidare till brukaren av anläggningen. All anslutning till drivdonet får endast utföras av behörig elektriker eller person med nödig kännedom om elektrisk installation i enlighet med gällande regler och standard. Se till att sp änningen är frånslagen före installation eller underhåll.

fi Lue nämä ohjeet ennen asentamista ja luovuta ohjeet valaisimen seuraavalle käyttäjälle. Kytkennät ohjaimeen saa tehdä ainoastaan pätevä sähköasentaja tai sähköasennukset hallitseva henkilö voimassa olevien määräysten ja standardien mukaisesti. Varmista, että jännite on kytketty päältä ennen asennusta ja huoltoa.

no Les disse instruksjonene før du starter installeringen, og gi den deretter videre til anleggets bruker. All tilkobling til omformeren skal utføres av godkjent elektriker eller person med nødvendig kunnskap om elektrisk installasjon i henhold til gjeldende forskrifter og standard. Sørg for at strømmen er koblet fra før installering og ved vedlikehold.

da Læs disse anvisninger før du starter installationen og aflever vejledningen til anlæggets bruger. Alle tilslutninger på konverteren skal udføres af en autoriseret elinstallatør i overensstemmelse med gældende regler og standarder. Afbryd spænding før installation og vedligeholdelse.

de Lesen Sie diese Anweisungen sorgfältig, bevor Sie mit der Installation beginnen, und bewahren Sie sie für späteres Nachschlagen auf. Sämtliche Anschlüsse am Treiber dürfen nur von einem qualifizierten Elektriker oder einer Person mit der notwendigen Fachkenntnis im Bereich Elektroinstallationen und in Übereinstimmung mit den geltenden Richtlinien und Normen vorgenommen werden. Stellen Sie vor Installations- oder Wartungsarbeiten sicher, dass keine Spannung mehr anliegt.

pl Przed przystąpieniem do instalacji należy się uważnie zapoznać z instrukcją i zachować ją na przyszłość. Wszystkie połączenia prowadzące do sterownika muszą zostać wykonane przez wykwalifikowanego elektryka bądź osobę posiadającą niezbędną wiedzę specjalistyczną w zakresie instalacji elektrycznych zgodnie z obowiązującymi przepisami i normami. Przed instalacją lub konserwacją wyłączyć zasilanie.

fr Lisez attentivement ces consignes avant de commencer l'installation. Pensez également à vous y reporter ultérieurement. Tous les raccordements au moteur doivent uniquement être effectués par un électricien qualifié ou par un individu qui dispose de l'expertise requise en matière d'installation électrique, conformément aux normes et aux règles pertinentes. Veillez à couper le courant avant l'installation et toute opération de maintenance.

!
- DO NOT install with power applied to device.
- DO NOT expose the device to moisture.

!
- Installera INTE med ström ansluten till enheten.
- Utsätt INTE enheten för fukt.

Input & Output Characteristics

Operating voltage	220~240VAC 50/60Hz
Standby power	<0.5W
Relay	Max. Resistive 10A, Capacitive 5A, Inductive 4A

Mechanical Data

Dimension	Φ90*52mm
Material	Flame-retarant/ABS
Protection Class	Class II

Safety & EMC

EMC standard(EMC)	EN55015, EN61000, EN61547
Safety standard(LVD)	EN60669-1, EN60669-2-1, AS/NZS60669-1/-2-1
RED	En300328, EN301489-1/-17
Certification	ENEC, CE, EMC, RED, RCM

Wireless Communication

Transceiver Frequency	2.4GHz ISM band
Radio Certification	FCC/IC, CE

Sensing

Movement detection	Max. 8m @3m height
Installation	Max. 5m

Connectors

Terminal block/Wire size	0.5mm² ~ 1.5mm² solid or stranded
Wire strip length	6-7mm

Environment

Operating Temperature Range	Ta: -20°C to +50°C
IP rating	Front IP44, Back IP20

Lighting Control

Features	DALI broadcast, Individual/group addressing, Scene control Autonomous sensor-based control, Scheduler control

Key Features
- PIR motion detection
- Daylight harvesting
- Works with DALI drivers or luminaires, broadcast control
- Autonomous sensor-based control
- Can be use for indoor applications
- Relay function

Applications
- Open offices
- Individual offices
- Conference rooms
- Classrooms
- Retail stores
- Hospitals
- Lobbies

Benefits
- Cost-effective solution for energy savings
- Energy code compliance
- Robust mesh network

Place/Detection Instruction

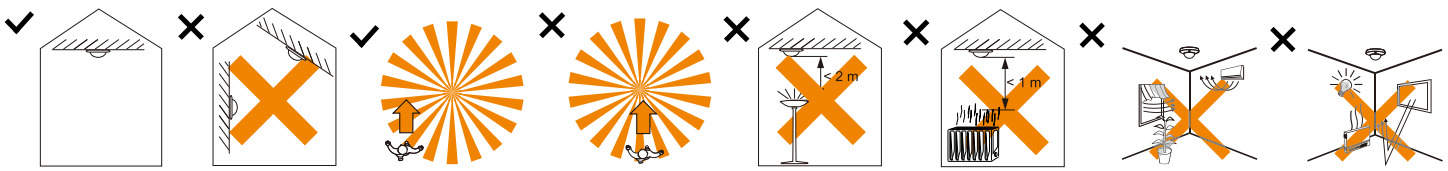

Before installation

NOTICE: Ensure you read the following guidelines thoroughly before using.

1. **Height and Distance Requirements**
Mounting height shall not exceed 4m. Maintain a distance of over 2m from wireless devices (e.g., routers, switches) to avoid interference.
2. **Avoid Heat Sources**
Place the fixture away from air conditioners, refrigerators, stoves, and areas with strong airflow or heat.
3. **Optimal Temperature~**
The sensor performs best below 25ºC. Sensitivity decreases in hotter environments, especially near body temperature.
4. **Motion Direction**
Side-to-side movement is detected better than movement directly toward the sensor.

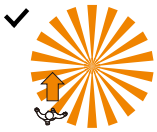

5. **Clear Line of Sight**
Position the sensor where people move most, ensuring nothing like glass, fabric, or objects block its view, as these can obstruct infrared signals.
6. **Stable Installation**
Install the Fixture on a solid, stable surface. Avoid mounting it in a way that causes movement or shaking, which can lead to false alarms.
7. **Adjust Sensitivity**
Set the detection sensitivity appropriately for the actual usage scenario to prevent false triggers or excessive detection leading to energy waste.

Installation Precautions

- Avoid areas with frequent temperature changes: Keep away from air conditioners, fans, refrigerators, ovens, and other objects that cause rapid temperature changes. The detection effectiveness of PIR motion sensors is closely related to temperature fluctuations, and vents or heat sources can lead to false alarms.
- Avoid areas with significant air flow.
- Avoid facing glass doors and windows directly: 1) Do not face glass doors and windows directly to avoid interference from strong light. 2) Avoid complex environments outside doors and windows, such as direct sunlight, crowds, and moving vehicles.
- Disconnect the SENSOR from the circuit before performing insulation testing of the wiring circuit.
- Avoid installing opposite large, constantly moving objects: Large objects with significant motion can cause sudden changes in airflow within the detection area, leading to false alarms. Outdoor PIR motion sensors should not be installed opposite large trees or tall bushes.
- Avoid areas with screens, furniture, large potted plants, or other obstacles within the detection range.
- Avoid areas exposed to direct sunlight.
- Do not place close to, or positioned such that, any light source points directly into the SENSOR.

Detection Pattern

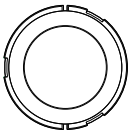

Whit Circular Lens Mask:
Ø8-9m detection area at 4m installation height

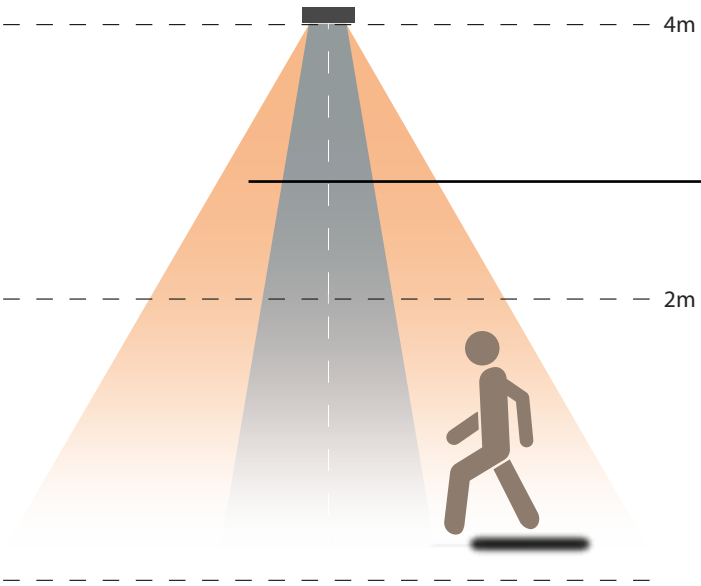

Higher sensitivity in center of detection area.

Whit Corridor Lens Mask:
Ø6-7m detection area at 3m installation height

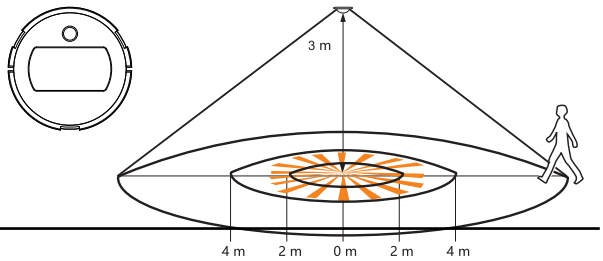

Whit Semi-Circular Lens Mask:
Half detection pattern compared to circular

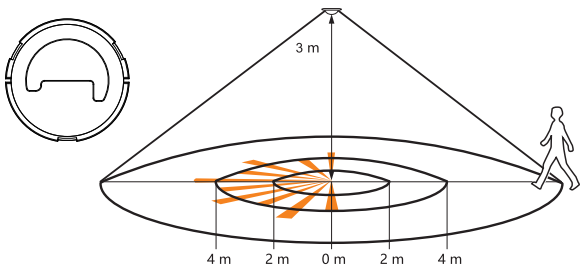

Note!
Recommended installation height for all applications, 2-4m for optimal detection.

Lens Mask Replacement

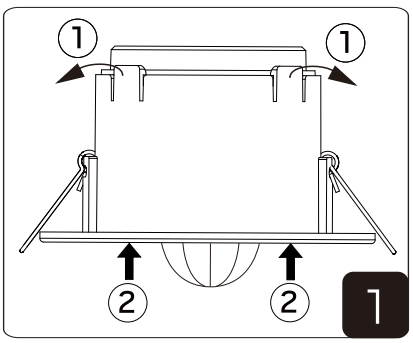

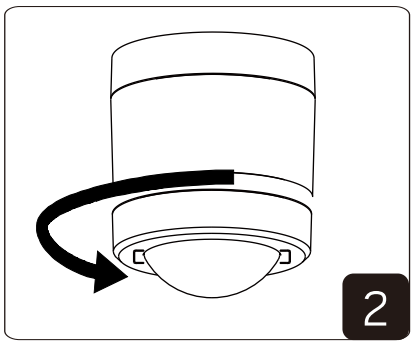

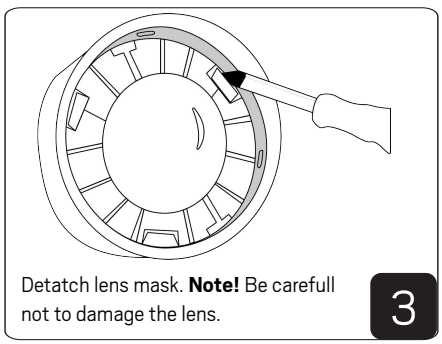

We reserve the right to change specifications at any time.

Lens Mask Replacement

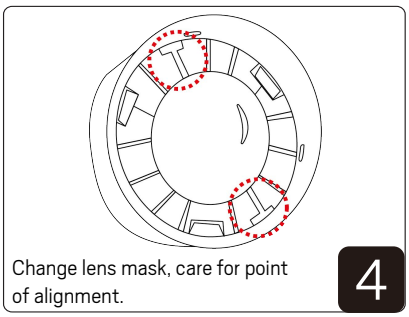

Change lens mask, care for point of alignment.

4

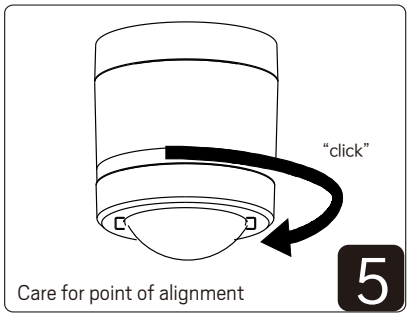

Care for point of alignment

5

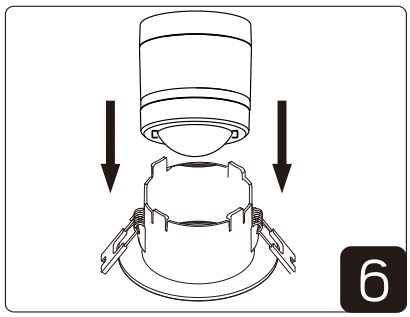

6

Installation

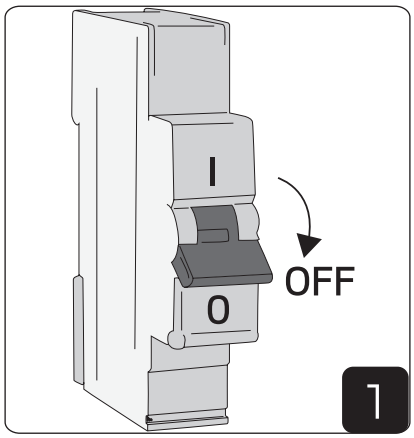

1

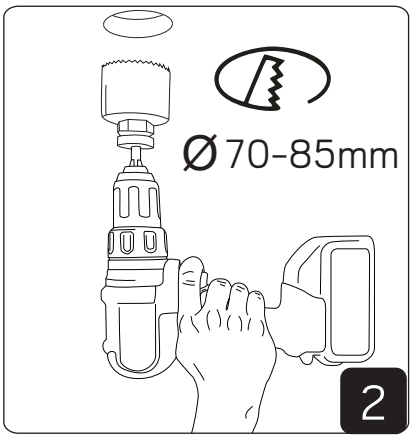

2

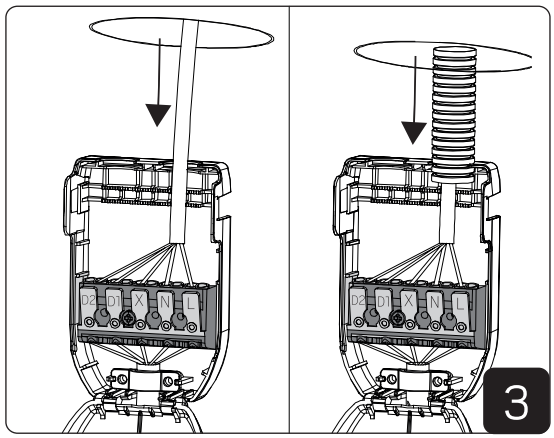

3

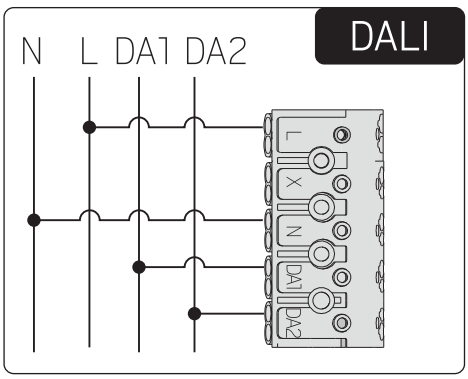

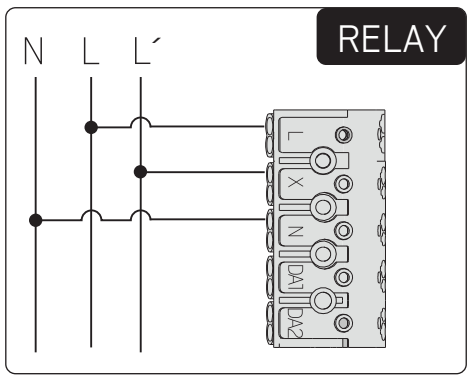

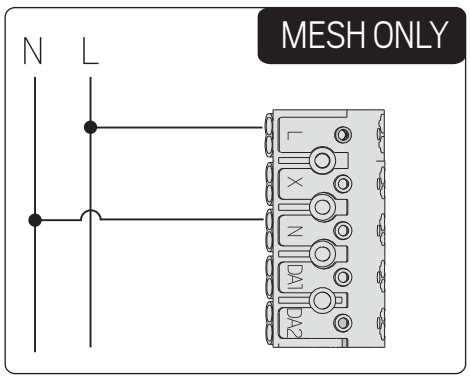

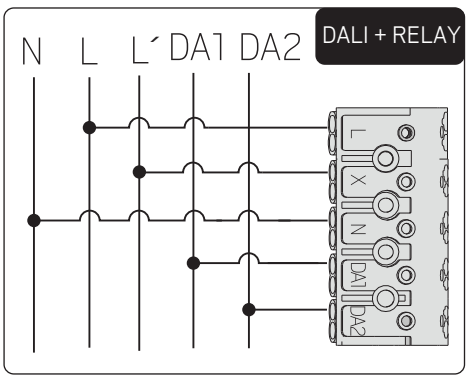

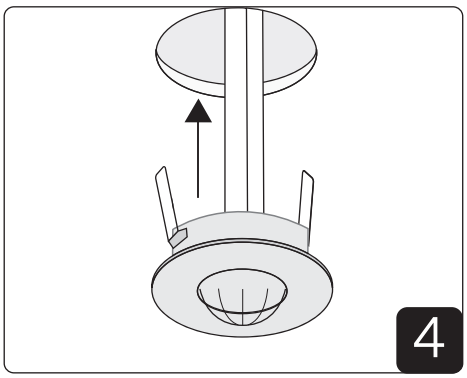

4

Note!

Bend the springs up and push detector through hole in ceiling. When fully inserted the springs snap back to hold the device in place. To avoid injury, take care when bending springs.

Note!

Relay input 230VAC.
Max load.

- Resistive Max 10A
- Capacitive Max 5A
- Inductive 4A

Recycling

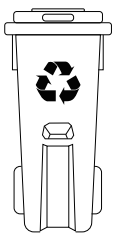

Recycle the product

① Metal ② Plastic
③ Electronic

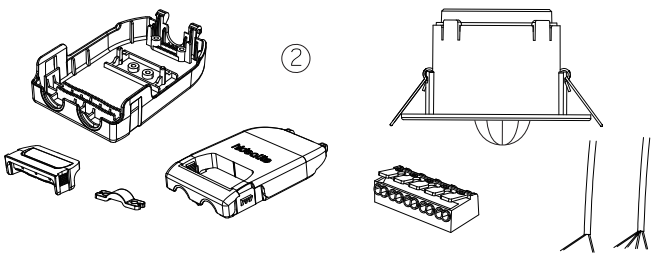

We reserve the right to change specifications at any time.