NO.	MATERIAL	DESCRIPTION	QTY	UNIT
①	CABLE	UTP CAT.5e 24AWG (1P*7/0.18BC)*4C,JACKET:PVC ,OD:5.0±0.2MM	1	M
②	CONN	RJ45,8P8C,UTP CAT.5e,TRANSPARENT,PIN GOLD PLATED 3U	2	PCS
③	MOLDED	PVC	2	PCS

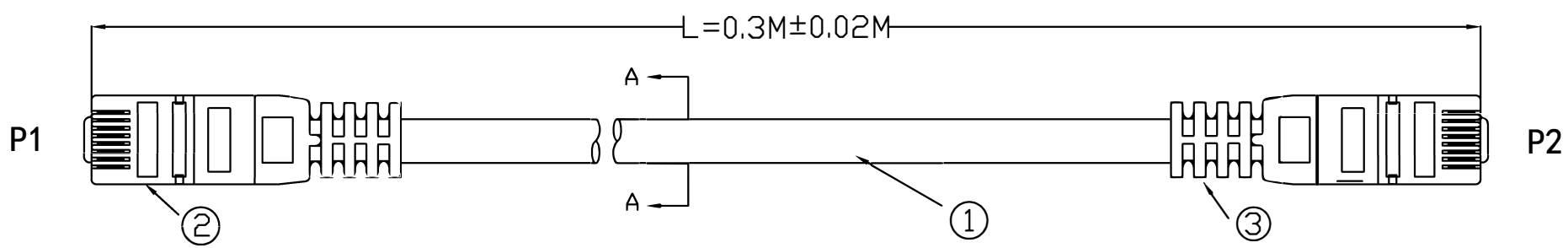

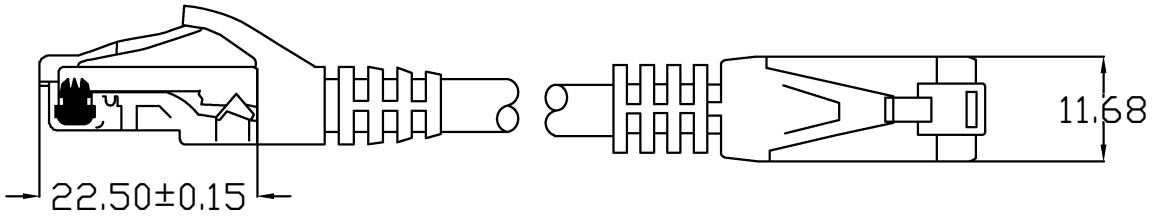

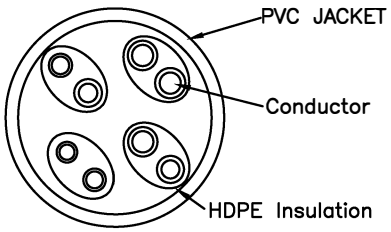

A–A

PIN OUT

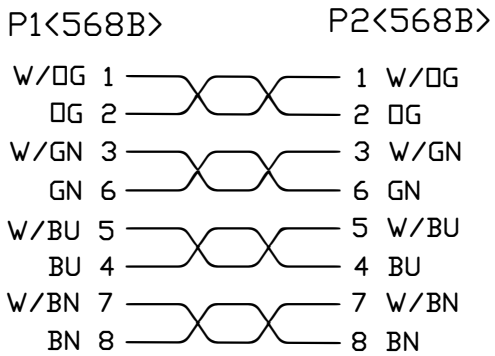

NOTES:

1. 100% short,open and miss wire test.
2. RoHS compliant.
3. UTP/CAT5e–PVC 24AWG TIA/EIA–568B

DRAWING	y z	DATE	2024/7/30	UNIT	MM	CUSTOMER		CUSTOMER PART NO.	
CHECK	y z	DATE	2024/7/30	SCALE	FREE	FILE NAME	UTP CAT.5e 24AWG,PVC		
APPROVED		DATE		TOLERANCE	.X±.XX±.XY	PART NO.	CLIX–A1.0		

1.0	Original	2024/07/30
REV.	REVISION	/

RoHS COMPLIANT

Bitline

SHEET	1/1
REV.	1.0