Stormwater Detention/Infiltration/Retention System

SD Half-Module
part no. 314090

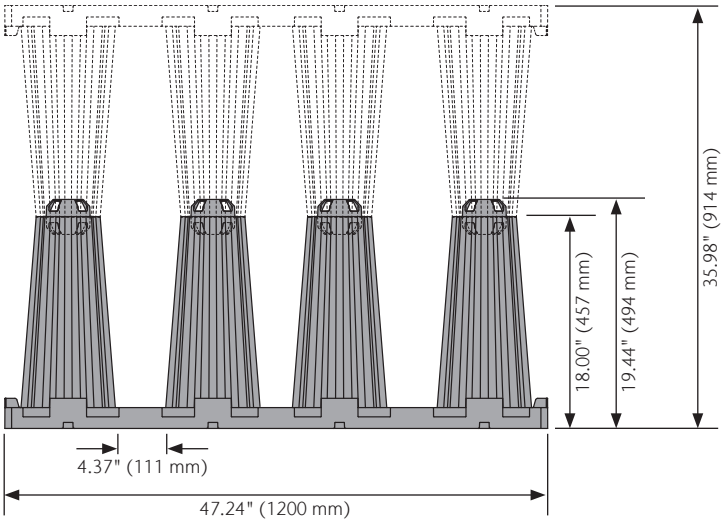

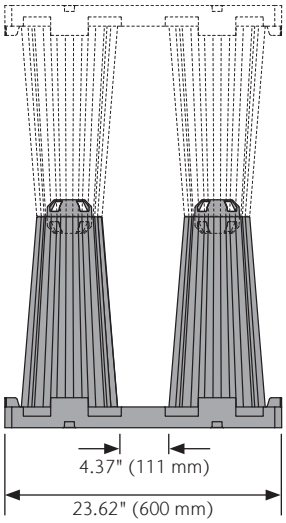

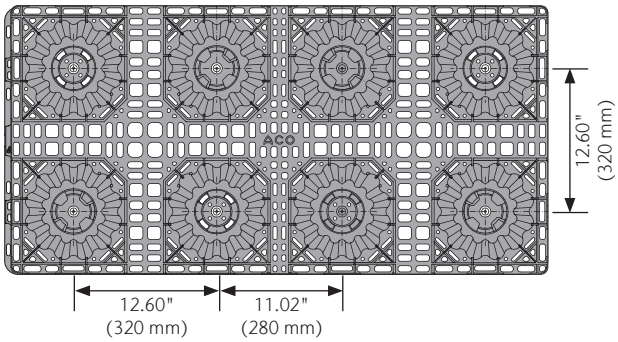

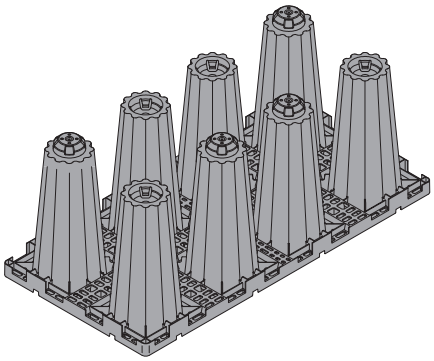

SD Side Panel
part no. 314091

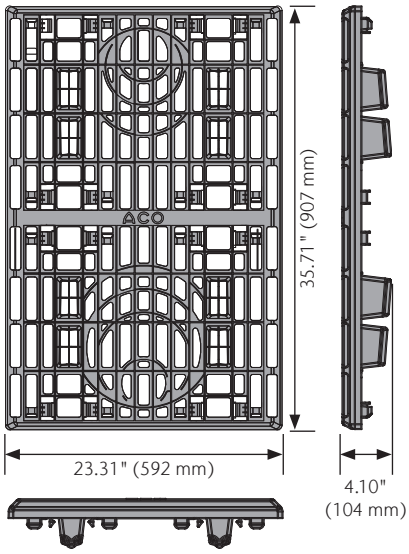

SD Half-Layer Side Panel
part no. 314098

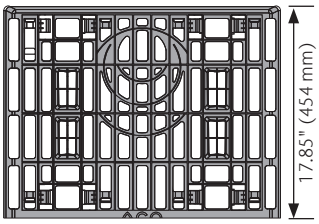

SD Top Cover
part no. 314092

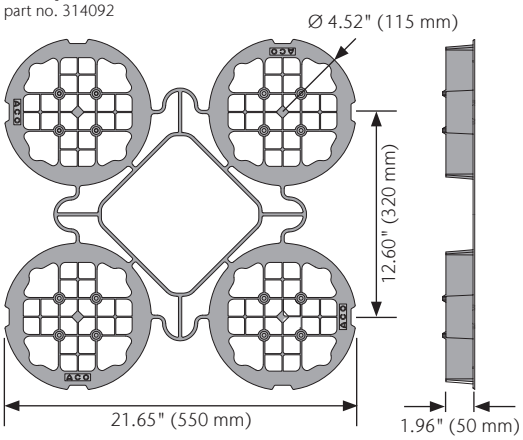

ACO Specification Information

Stormwater Detention/Infiltration/Retention System

Half-Layer Top Cover Plate
part no. 314094

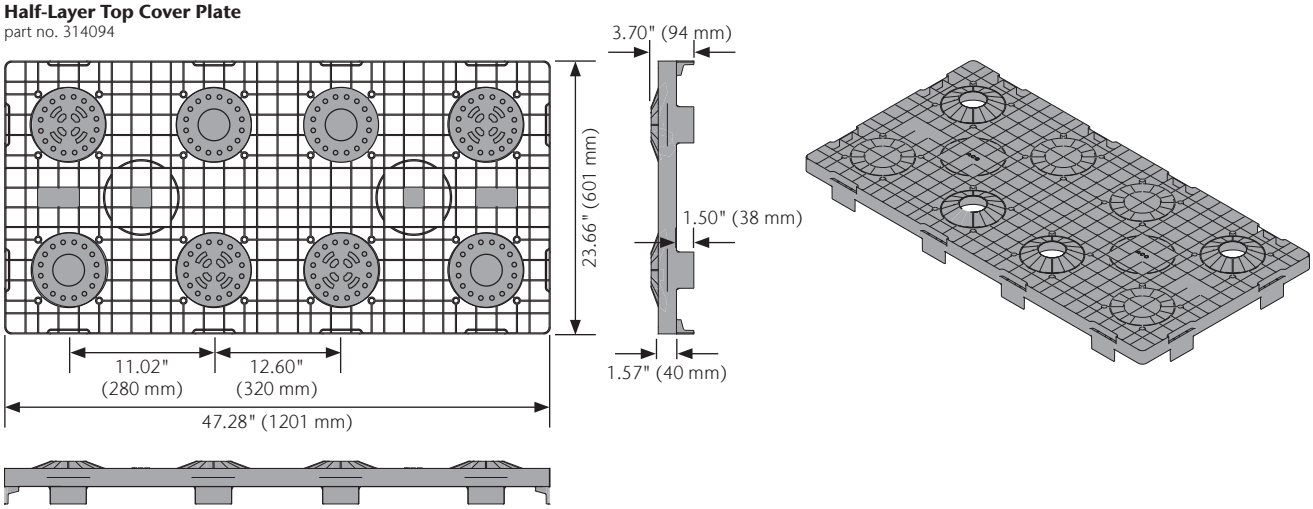

Horizontal Pipe Connector
part no.: see chart

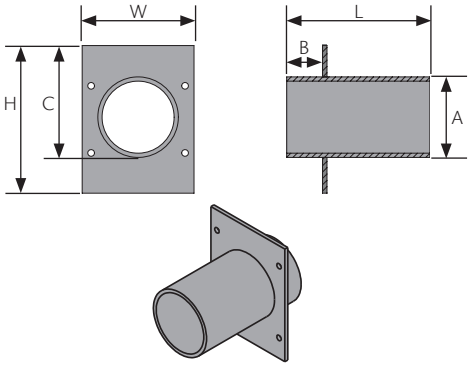

Remote Access Cover (Vented)
part no. 314053

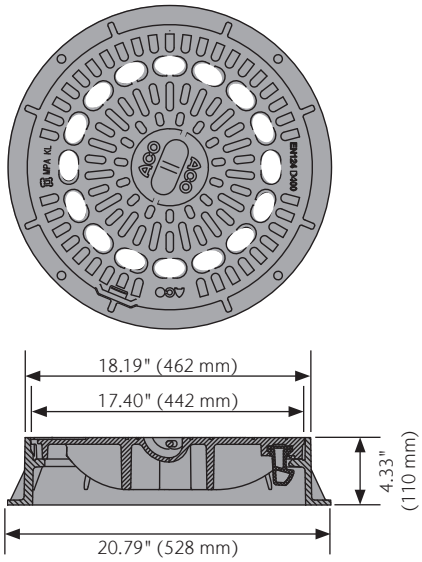

Remote Access Cover (Non-Vented)
part no. 314043

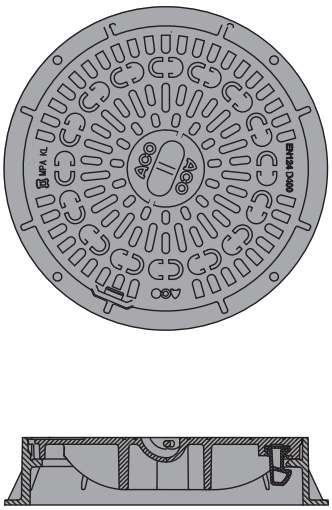

Inspection Point Cover
part no. 314044

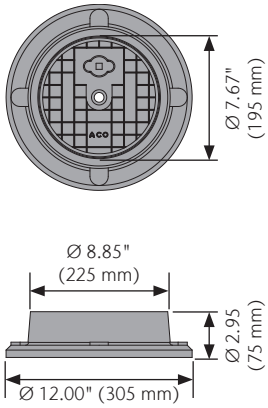

ACO Specification Information

Stormwater Detention/Infiltration/Retention System

Remote Access Plate
part no. 314075

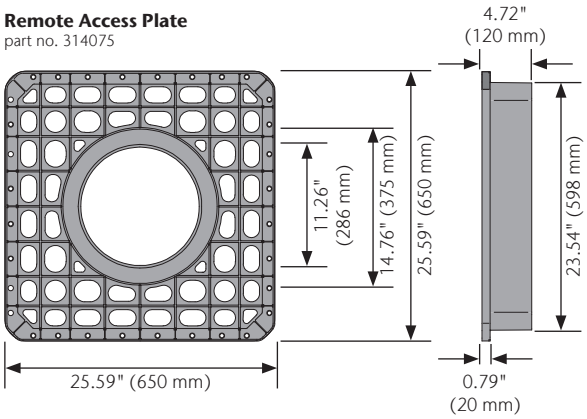

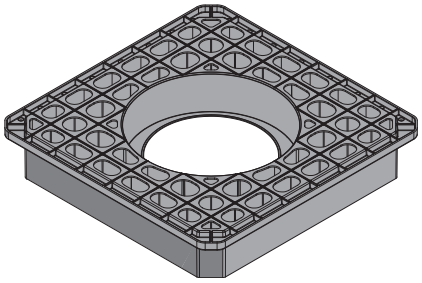

SD Remote Access Unit
part no. 138141

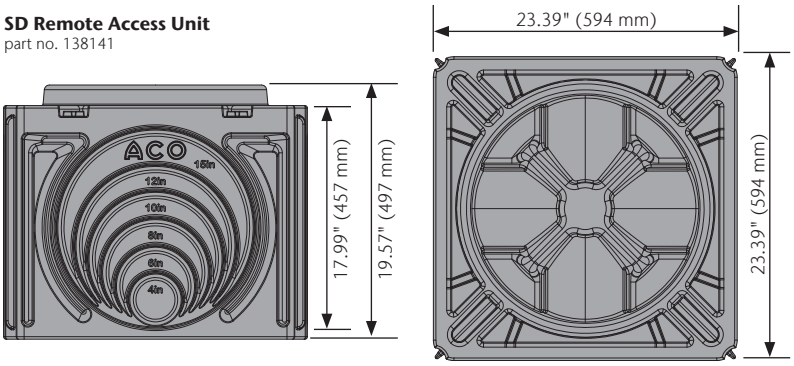

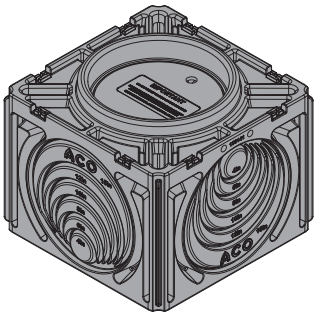

Extension Shaft
part no. 314038

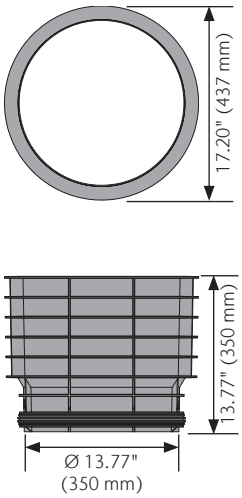

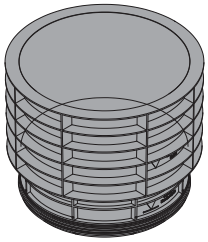

Extension Shaft with Pipe Socket
part no. 314039

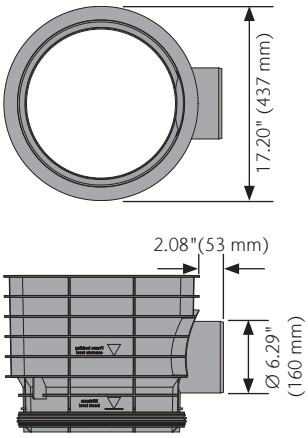

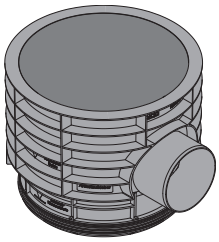

Vertical Inspection Point Connector
part no. 27018

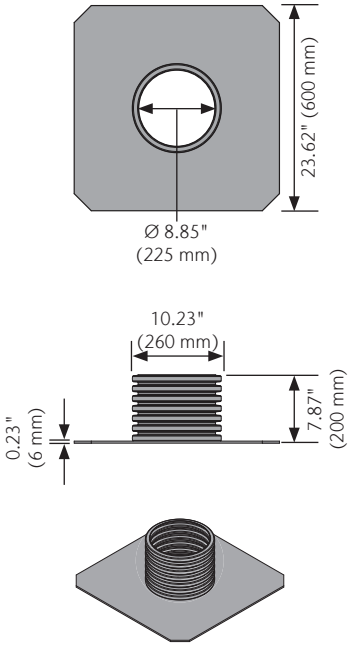

ACO Specification Information