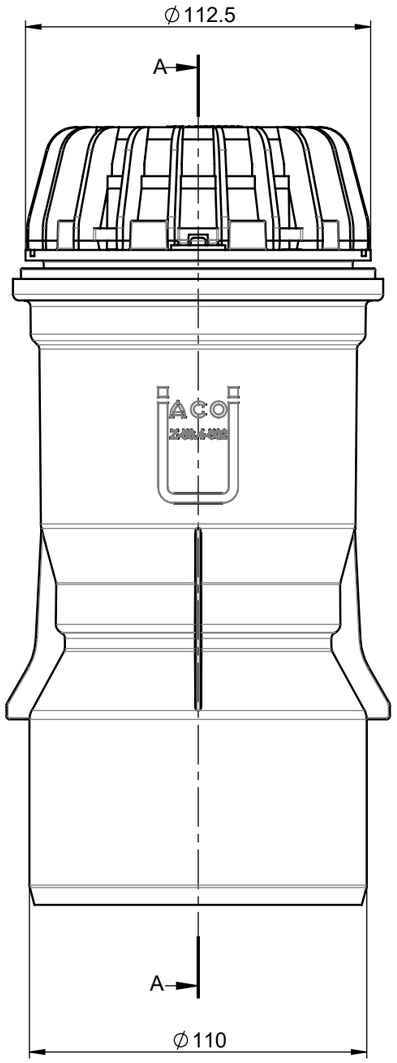

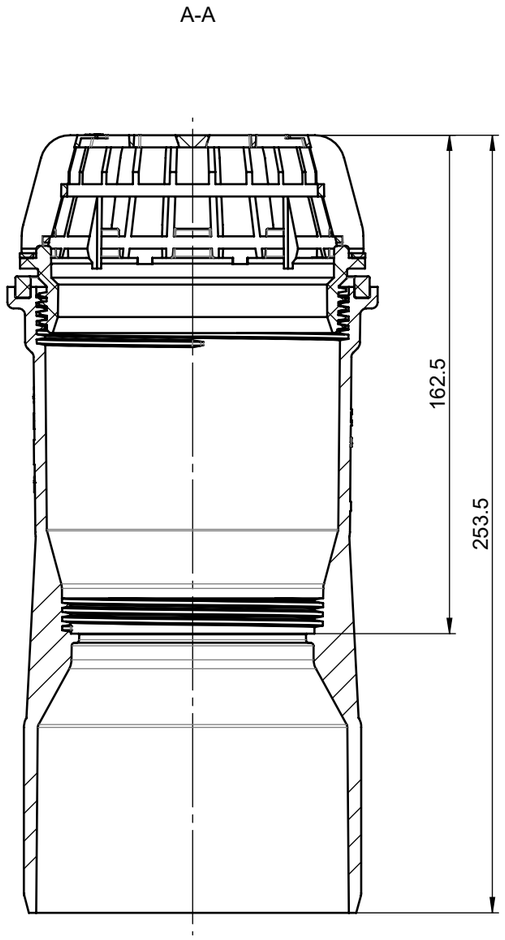

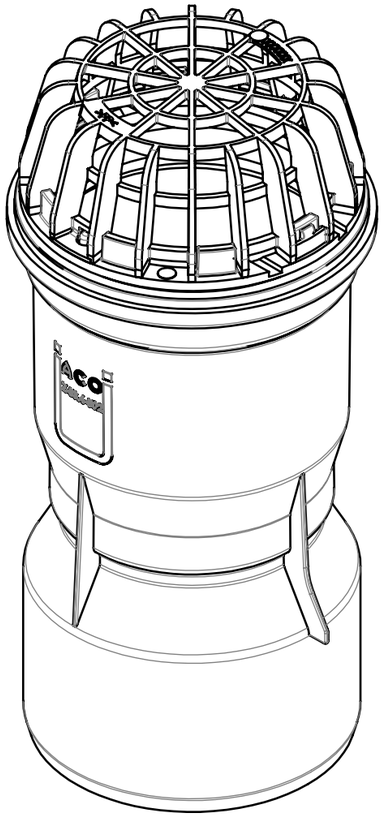

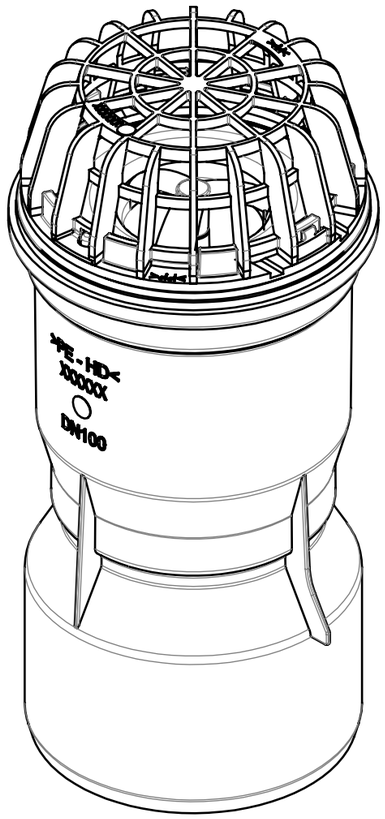

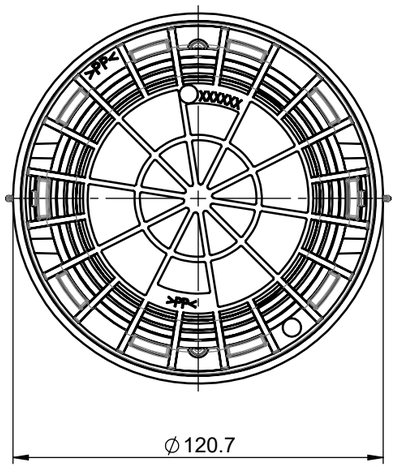

local article number: 3005092

ACO Ahlmann SE & Co. KG Am Ahlmannkai 24782 Büdelsdorf www.aco.com		drawing-no.: **1171686-M**	index: **005**	documenttype: marketing drw.
	created by: mwandkowski	reviewed by: mwandkowski	projection:ISO-E	scale: 1:2

title:

ACO Backflow preventer
Drainage connection for Shoe scraper grey
Entwässerungsanschluss für Schuhabstreifer grau

serial-released

The reproduction, distribution and utilization of this document as well as the communication of its contents to others without express authorization is prohibited. Offenders will be held liable for the payment of damages. All rights reserved in the event of the grant of a patent, utility model or design. Observe copyright by ISO 16016

release date: 25.04.2023

sheet: 1/1

Solidworks 2019 - DIN A3 - Version 2.2