ESVG 20 BK

Pressure compensation cable gland, polyamide, RAL 9005, M20

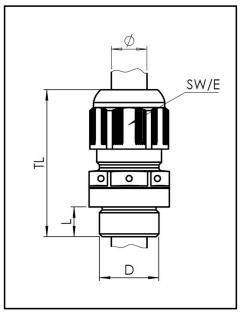

Products may differ in size, colour and appearance to those shown. If you require further information or customisation, please contact us directly.

Material cable gland	Polyamide
Material membrane	ePTFE
Material sealing gasket	EPDM
Airflow at 70mbar	42 l/h
Temp. range min	-40 °C
Temp. range max	100 °C
Glow wire test	750 °C
Protection class	IP68 / IP69
Thread type	M
Ø Connection thread D	20
Lead	1,5
Length screw-in thread L	10 mm
Ø cable diameter min	6 mm
Ø cable diameter max	13 mm
Key width SW	24 mm
Collar diameter (E)	27 mm
Install. torques fitting	2,3 N m
Install. torques cap nut	1,5 N m
Total length TL	41 mm - 50 mm
Equipment	Incl. connection thread gasket
Product Color	RAL 9005
Order no. RAL 9005	10060802
Type	ESVG 20 BK
Packing unit	1
EAN number	4007685608022

Your Contact:
WISKA Hoppmann GmbH
Kisdorfer Weg 28 · 24568 Kaltenkirchen · Germany
☎ +49-4191-508-0 · 🖷 +49-4191-508-209
contact@wiska.de · www.wiska.com

Other technical data on request / subject to change without notice

Tariff number	39269097
ETIM-Classification	EC000441

Recommended accessories

MFD 20/02/065	10060953
EMUG 20 BK	10061782
RDE 20	10062185
BS 13	10064010
MFD 20/03/040	10064341
MFD 20/02/060	10064395
MFD 20/03/045	10102306

20.03.2025

Your Contact:
WISKA Hoppmann GmbH
Kisdorfer Weg 28 · 24568 Kaltenkirchen · Germany
☎ +49-4191-508-0 · 🖷 +49-4191-508-209
contact@wiska.de · www.wiska.com

Other technical data on request / subject to change without notice

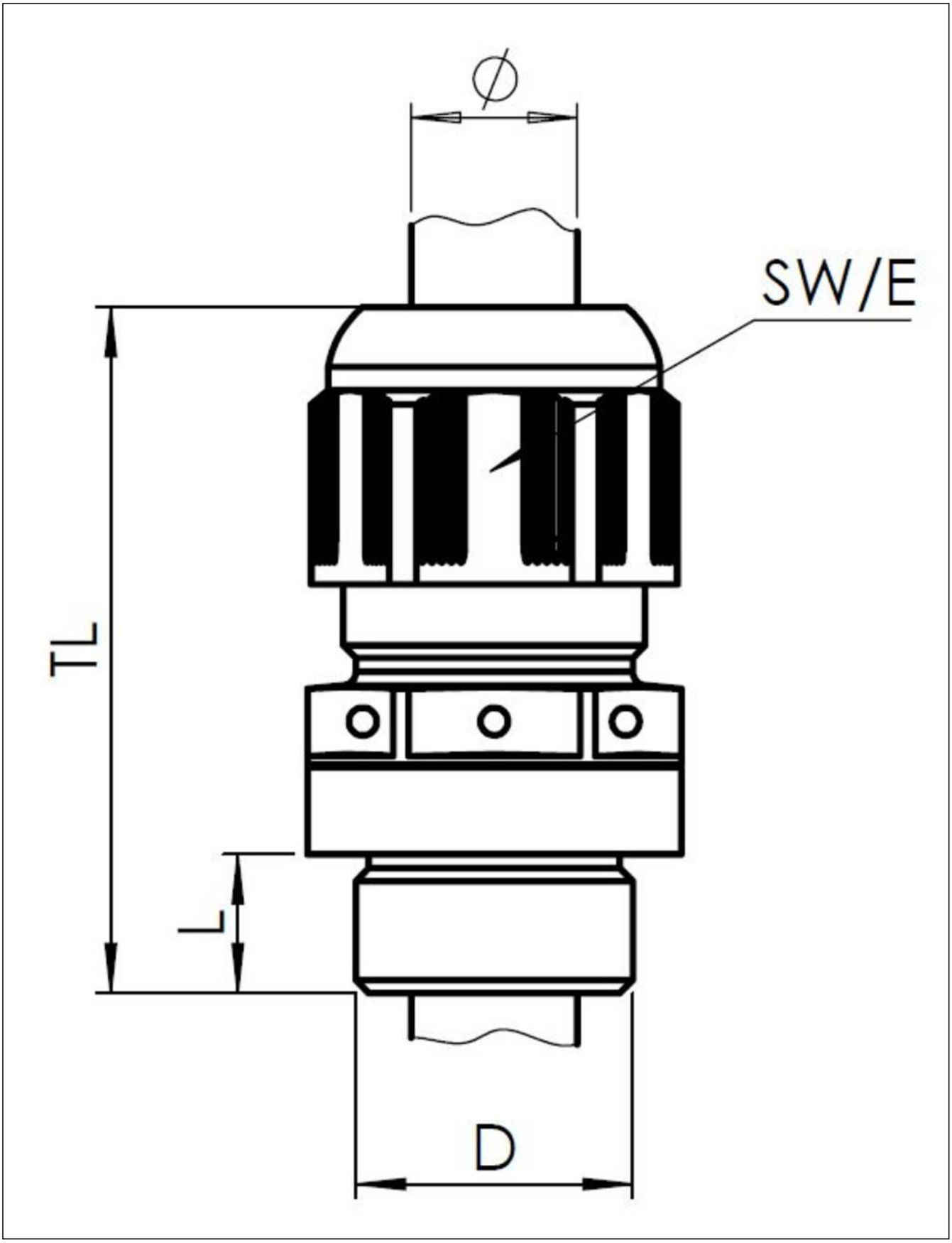

Your Contact:
WISKA Hoppmann GmbH
Kisdorfer Weg 28 · 24568 Kaltenkirchen · Germany
☎ +49-4191-508-0 · 🖷 +49-4191-508-209
contact@wiska.de · www.wiska.com

Other technical data on request / subject to change without notice