2207A Oras - Body for washbasin faucet, 230/12 V

EAN: 6414150075216
www.oras.com/en/products/oras/product/2207A

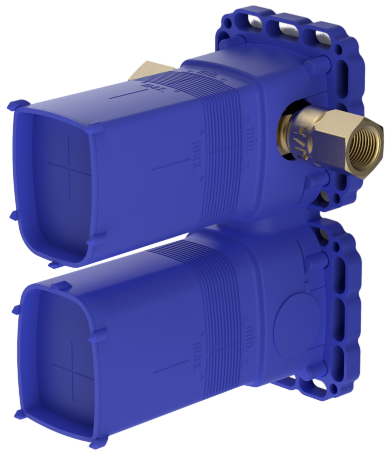

Body part for touchless, concealed thermostatic washbasin faucet. Mains supply 230/12 V. Cover part no. 2207C is sold separately.

- Public & Semi-public
- Concealed unit, External transformer
- Wall mounted for concealed unit
- Included power supply
- body made of DZR brass, multifix fastening system, Rotating installation option

Technical data

Technical properties

DN-size (nominal dimension)	**DN 15**
Hot water supply	**max. +70°C**
Working pressure	**50 - 1000 kPa**
Connection size	**G1/2**

Electronic properties

Electrical Connection	**230/12 V**
Connection cable	**10m, 4 x 0.25 mm²**

Regulations

Protection class	**IP 55 / transformer IP 40**

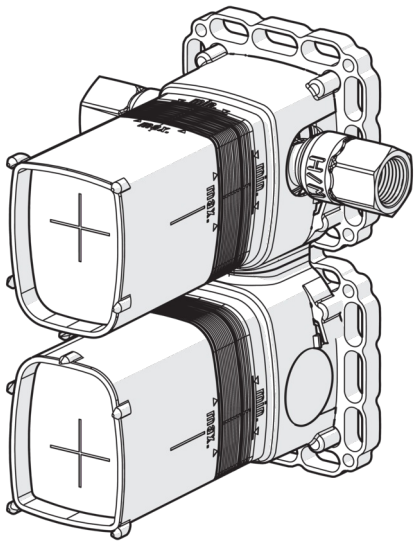

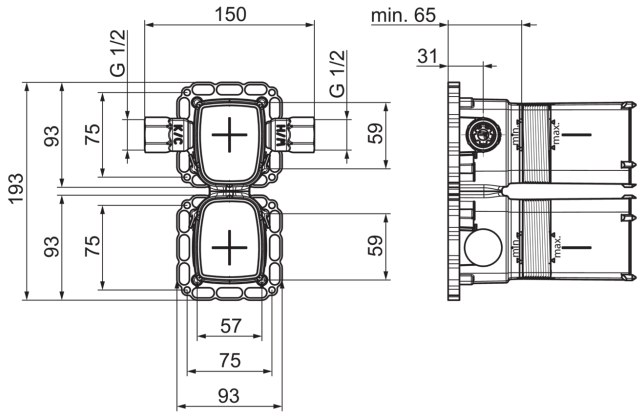

Spare parts

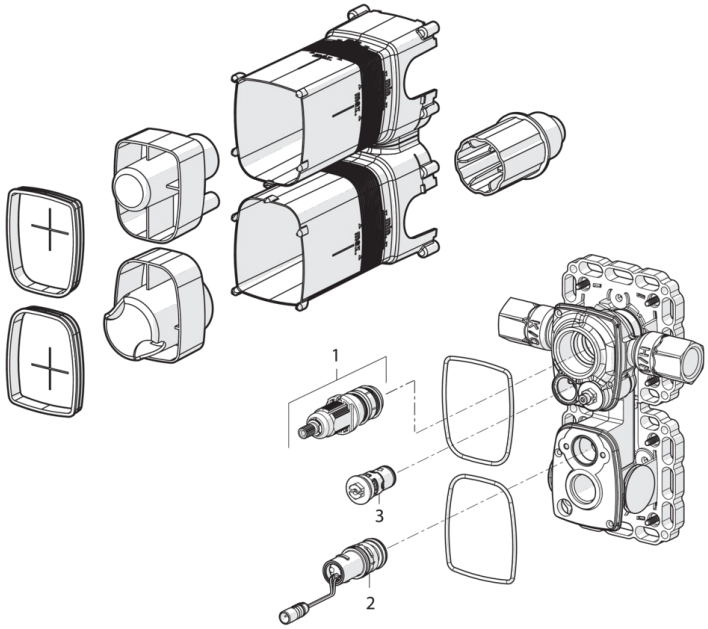

SP2207A

	Code
01	601949V
02	602043V
03	602346V