OUNEVA
OUNEVA GROUP

PRODUCT CARD

Product data

Product code	**VA05-0004**	STK-code	**5040309**	EAN-code	**6410050403098**
Product name	C-connector C9			ETIM class	**EC002290**
Wires	35-50 mm²/35-50 mm²				

Technical data

	-	
	-	
	-	
	-	
	-	
	-	
Number of poles	**1**	pcs
Max. Cross section	**50**	mm²
	-	
	-	
	-	
	-	
	-	
Weight	**51,3**	g
	-	
	-	
Color / Material	**Copper, no coating**	
Mounting / Connection	**Crimping dies BC8-9 (Elpress)**	

CE RoHS

Description

C-sleeves are designed for connecting, branching and extending of copper cables. C-Sleeves are made of 99,9% pure copper.

Drawing

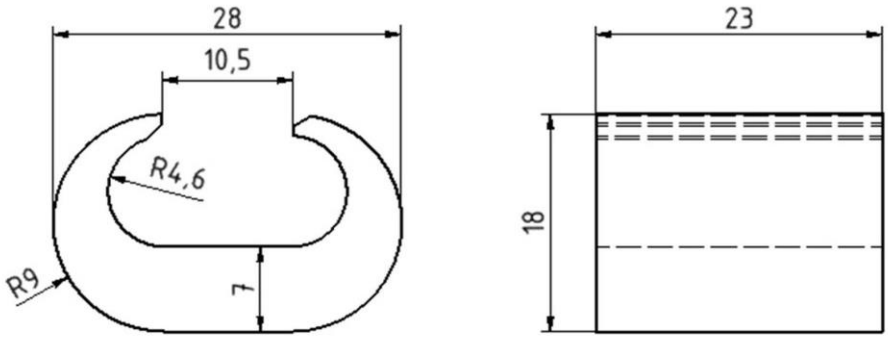

Package

Package	**Box**	Pcs / Package	**50**	Weight [kg]	**2,57**
Length [mm]	**85**	Width [mm]	**144**	Height [mm]	**85**

Ouneva Oy
Teollisuustie 21
FI-82730 Tuupovaara
Finland
Tel. +358 400 179 750
info@ouneva.fi
www.ounevagroup.fi
www.ounevaproducts.fi